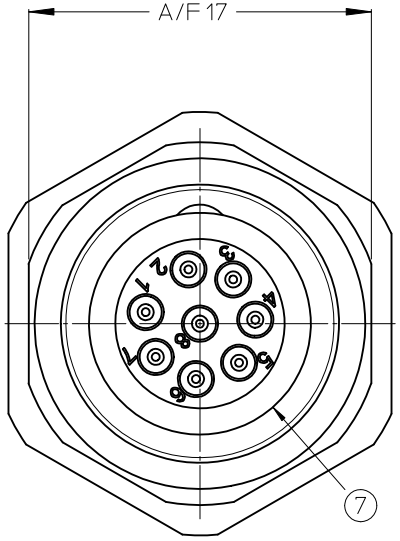

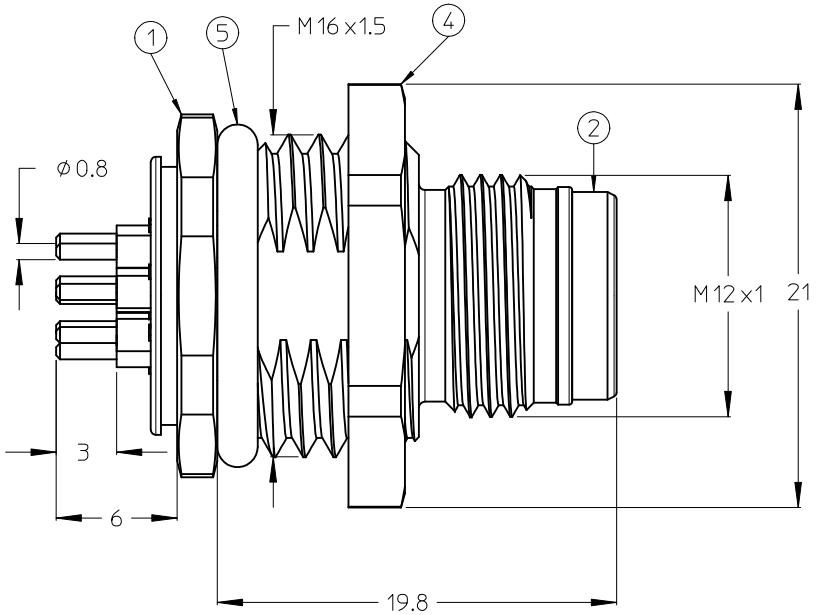

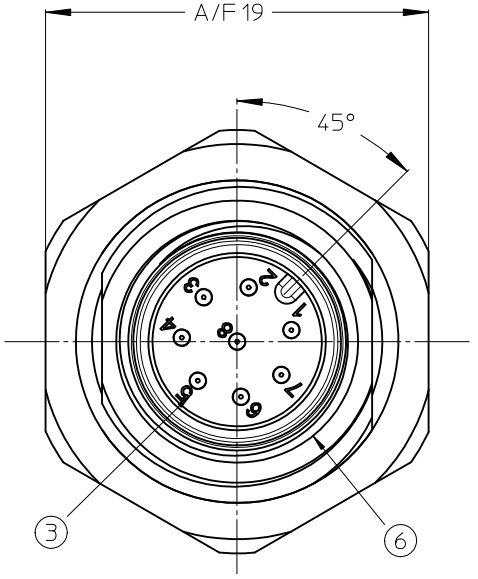

ITEM	COMPONENT	MATRIAL	FINISH
1	REC SHELL	BRASS	NICKEL PLATED
2	INSERT	PA	BLACK
3	CONTACT	BRASS / GOLD	CuZn Ni/ Au
4	M16 NUT	BRASS	NICKEL PLATED
5	O-RING	NBR	BLACK
6	O-RING	VITON	RED
7	POTTING MATERIAL	EPOXY	NONE

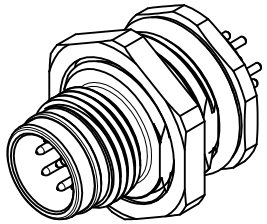

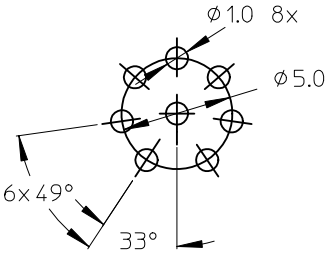

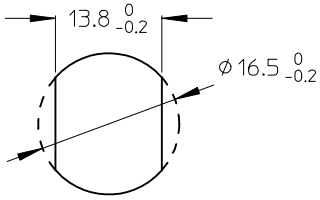

POL	MATERIAL NO.	ENGINEERING NO.
8	1200840032	WR8U46000

VOLTAGE RATING:	30 VAC / 36 VDC
AMPERAGE RATING:	2 A
PROTECTION CLASS:	IP 67/68/69K
OPERATING TEMPERATURE:	-25°C / 90°C
UL CERTIFICATION:	FILE NO. E152210
CSA CERTIFICATIONS:	FILE NO. LR6837

ENTER DESCRIPTION
EC NO: WEU2010-0298 2010/01/26
DRWN:NSTAUDIGEL 2010/02/01
CH'KD: 2010/02/02
APPR:FPACHER
DESCRIPTION
REV
1

QUALITY SYMBOLS
▼=0
Ⓒ=0

GENERAL TOLERANCES (UNLESS SPECIFIED)

	mm	INCH
4 PLACES	± ---	± ---
3 PLACES	± ---	± ---
2 PLACES	± 0.05	± ---
1 PLACE	± 0.1	± ---
ANGULAR ±---°		

DRAFT WHERE APPLICABLE MUST REMAIN WITHIN DIMENSIONS

DIMENSION STYLE: MM ONLY
SCALE: 4:1
DESIGN UNITS: METRIC
THIRD ANGLE PROJECTION

DRAWN BY: NSTAUDIGEL DATE: 2010/01/26
CHECKED BY: DATE:
APPROVED BY: FPACHER DATE: 2010/02/01
MATERIAL NO.:

TITLE: M12U 8-P REC MALE BACK SHIELDED

MOLEX INCORPORATED

DOCUMENT NO.: SD-120084-018
SHEET NO.: 1 OF 1

SIZE A3

THIS DRAWING CONTAINS INFORMATION THAT IS PROPRIETARY TO MOLEX INCORPORATED AND SHOULD NOT BE USED WITHOUT WRITTEN PERMISSION