PTS645 Series
6 mm Tact Switches



Features/Benefits

- ***Compact size 6 x 6 mm***
- ***Variety of actuator lengths***
- ***Choice of actuation force***
- ***RoHS compliant and compatible***

Typical Applications

- ***Consumer products***
- ***Instrumentation***
- ***Computer products***
- ***Industrial***

Specification

FUNCTION: Momentary action
CONTACT ARRANGEMENT: SPST, N.O.
TERMINALS: PC pins

Mechanical

ACTUATION FORCE: PTS645 models: 130 grams, 160 grams, 200 grams, 260 grams
LIFE EXPECTANCY: 100,000 operations.

Electrical

CONTACT RATING: 50 mA @ 12 V DC.
DIELECTRIC STRENGTH: 250 V AC min.
CONTACT RESISTANCE: 100 mΩ max. initial.
INSULATION RESISTANCE: 10^{11} Ω min.

Environmental

OPERATING TEMPERATURE: -20°C to 60°C

NOTE: Specifications listed above are for switches with standard options.
For information on specific and custom switches, consult Customer Service Center.

Process

SOLDERING: Preheating to 100°C for 45 sec. max. Keep flux flush with top surface of PCB; do not apply to component side of PCB and area where terminals are located. Soldering to 255°C for 5 sec. max. Clean by brushing on solder surface. Do not clean switch with solvents.

Materials

BASE: 6/6 nylon or glass filled polyester (PBT).
ACTUATOR: 6/6 nylon or polyacetal.
COVER PLATE: PTS645S: Polyester or stainless steel.
PTS645T and PTS645V: Tin alloy or stainless steel.
DOME CONTACTS: Phosphor bronze, silver clad.
STATIONARY CONTACTS: Brass, silver plated.
TERMINALS: Brass, silver plated. Insert molded.

Packaging

Bulk packaging.

Tape & reel for the SMT type:
Reel of 1,000 pieces

How To Order

Our easy build-a-switch concept allows you to mix and match options to create the switch you need. To order, select desired option from each category and and place it in the appropriate box.

P T S 6 4 5 [ ] [ ] [ ] [ ] [ ] [ ] [ ] [ ] L F S

Termination
S Thru-hole
T Thru-hole with ESD pin
V Vertical

Actuation Force
L 130 grams
M 160 grams
H 200 grams
K 260 grams

Actuator Height to PCB/Ground Pin
43 4,3 (.169), thru-hole and SMT
50 5,0 (.197), thru-hole and SMT
70 7,0 (.275), thru-hole
95 9,5 (.374), thru-hole
31 3,15 (.124), vertical
39 3,85 (.151), vertical
58 5,85 (.230), vertical
83 8,35 (.329), vertical
15 15,85 (.624), vertical

Insertion Type
NONE Thru hole
SMTR* Surface mount, tape & reel

RoHS compliant and compatible.
Silver plated.

*Only the PTS645 in horizontal type without ESD pin is available in SMT type.

PTS645 Series
6 mm Tact Switches

SERIES

PTS645

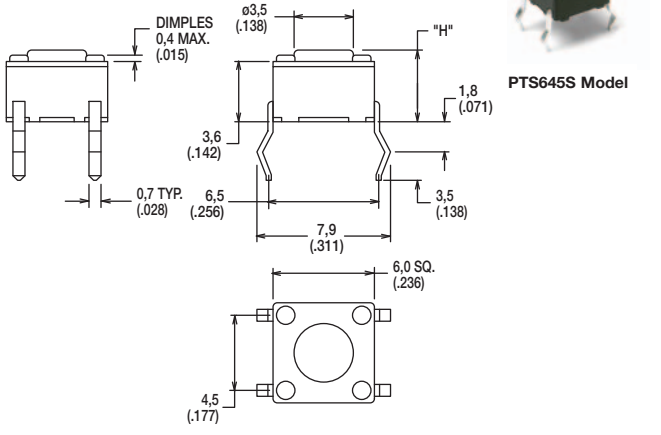

PTS645S Model

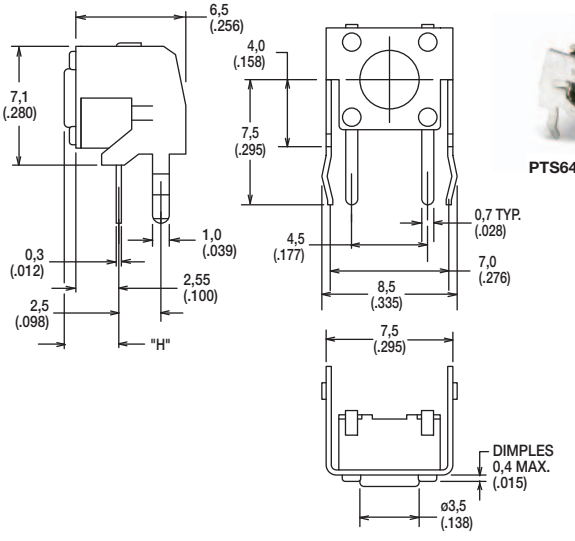



PTS645V Model

TERMINATION

S STRAIGHT

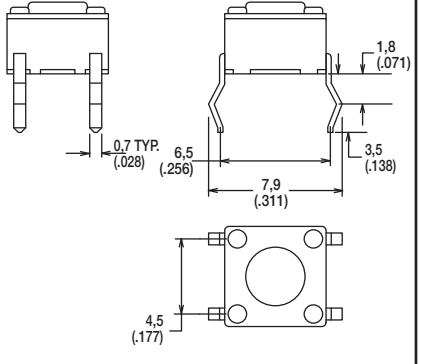

PCB LAYOUT

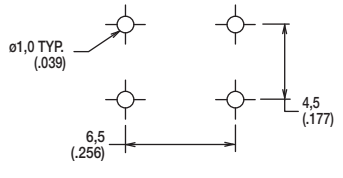

T STRAIGHT WITH EMC PIN

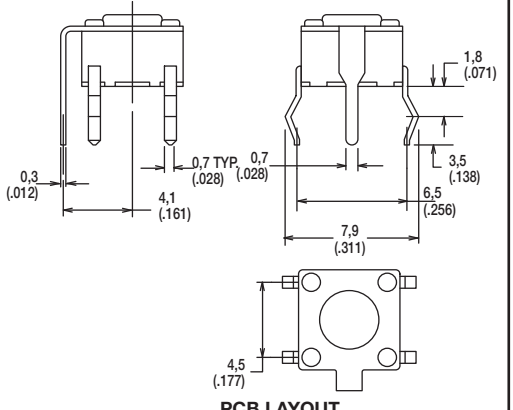

PCB LAYOUT

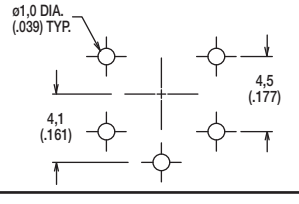

V VERTICAL

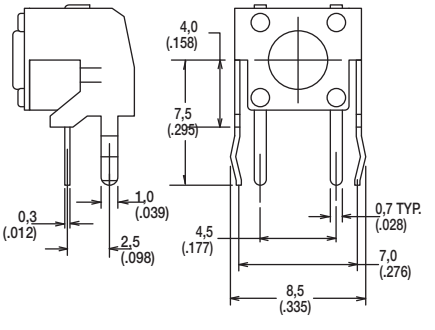

PCB LAYOUT

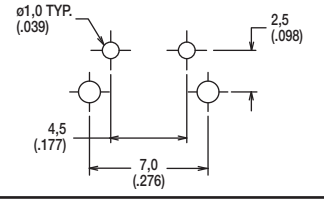

SMT

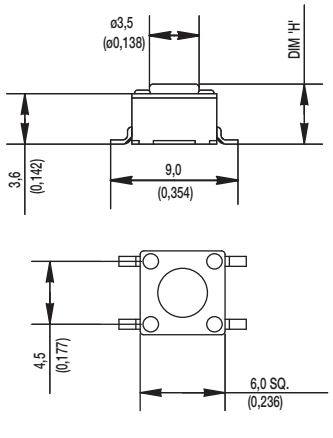

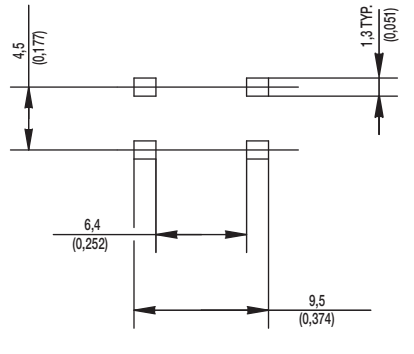

First Angle Projection

Dimensions are shown: Inch (mm)
Specifications and dimensions subject to change

ACTUATION FORCE

OPTION CODE	FORCE
L	130 grams
M	160 grams
H	200 grams
K	260 grams

ACTUATOR HEIGHT

OPTION CODE	HEIGHT "H" or LENGTH "L"	TERMINATION	SCHEMATIC Without EMC pin	SCHEMATIC With EMC pin
43	4,3 (.169)	Thru-hole and SMT	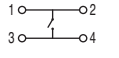	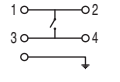
50	5,0 (.197)	Thru-hole and SMT		
70	7,0 (.275)	Thru-hole		
95	9,5 (.374)	Thru-hole		
31	3,15 (.124)	Vertical		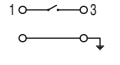
39	3,85 (.151)	Vertical		
58	5,85 (.230)	Vertical		
83	8,35 (.329)	Vertical		
15	15,85 (.624)	Vertical		

43

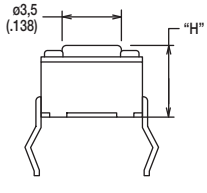

50

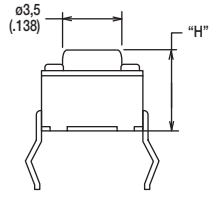

70

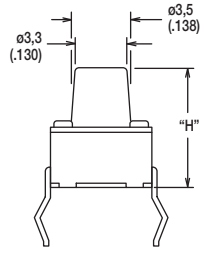

95

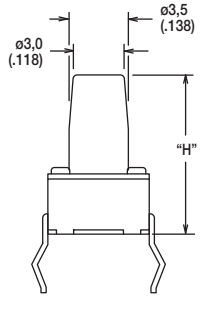

31

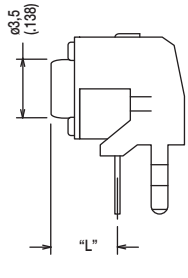

39

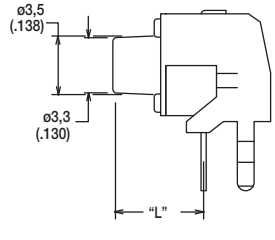

58

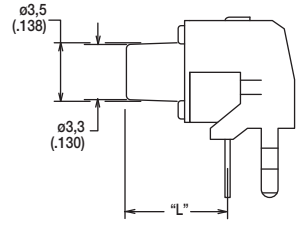

83

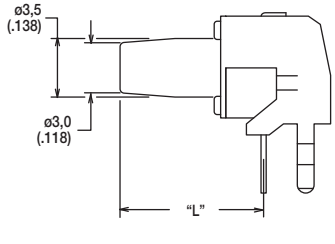

15

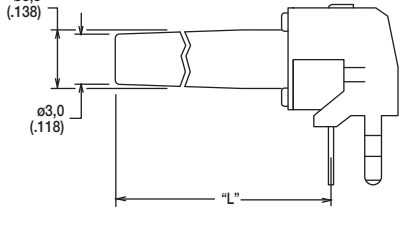

First Angle Projection

Dimensions are shown: Inch (mm)
Specifications and dimensions subject to change