MURR ELEKTRONIK
stay connected

M8 female 0° A-cod. with cable

PVC 3x0.25 gy UL/CSA 5m

Female straight
M8, 3-pole
Art-No. 7005 - M8 Lite - (plastic hexagonal screw) on request
with cable sleeves
Plastic housings with good resistance against chemicals and oils.
The resistance to aggressive media should be individually tested for your application. Further details on request.
Further cable lengths on request.

Link to Product

Illustration

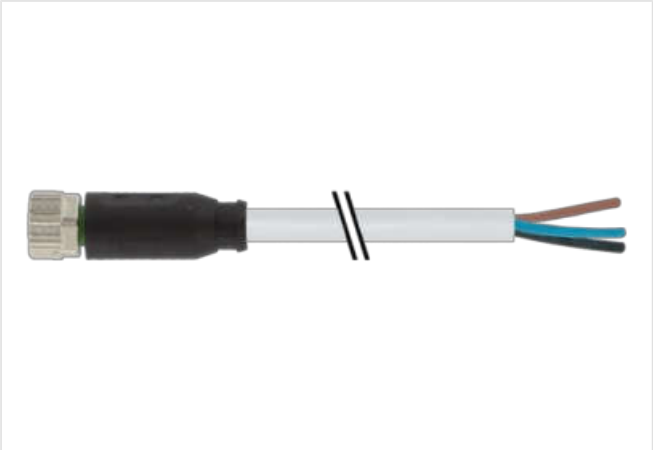

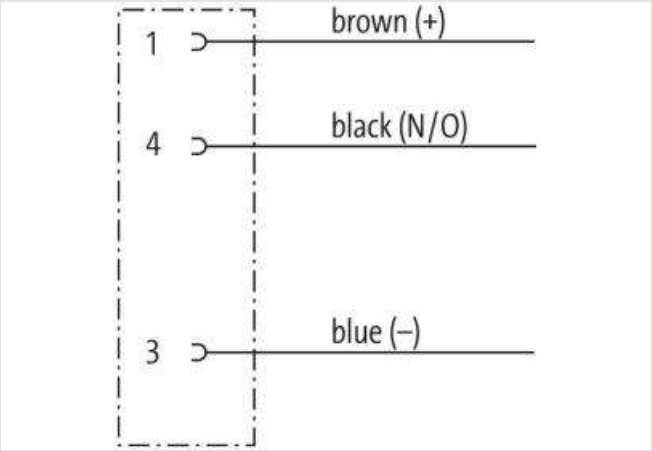

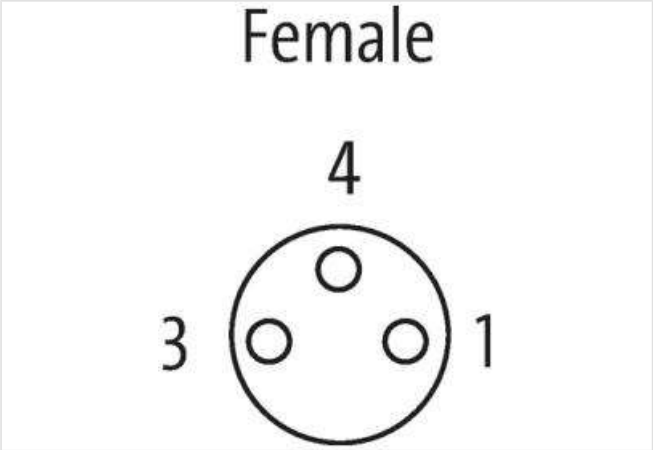

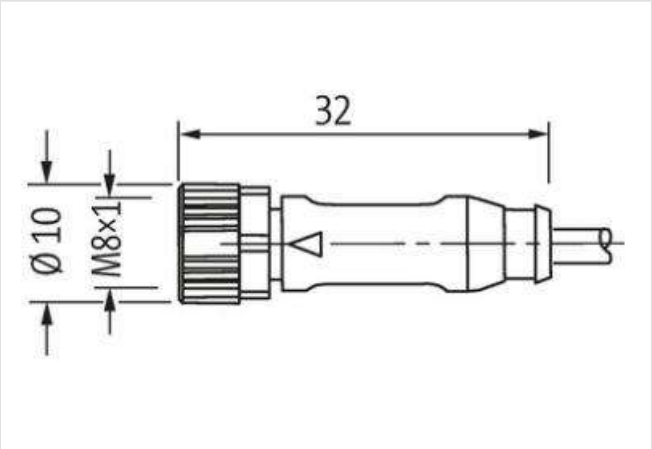

Product may differ from Image

Form

Form	08041

Technical Data

The information in this brochure has been compiled with the utmost care.
Liability for the correctness completeness and topicality of the information is restricted to gross negligence. Version: 2023-03-17

Operating voltage	max. 50 V AC/60 V DC
Operating voltage (only UL listed)	30 V AC/DC
Rated surge voltage	1.5 kV
Operating current per contact	max. 4 A
No. of poles	3
Material group	IEC 60664-1, category I
LED display	no
Locking of ports	Screw thread (M8×1 mm) recommended torque 0.4 Nm, self-securing
Protection	IP65, IP66K, IP67 inserted and tightened (EN 60529)
Material	PUR
Locking material	Zinc die casting, matte nickel plated
suitable for corrugated tube (internal Ø)	6.5 mm
Compression gland	M8 (SW9)
General data	
Standards	DIN EN 61076-2-104 (M8)
Mounting method	inserted, tightened
Material contact	Copper alloy
Material contact surface	Au
Material gasket	FKM
Pollution Degree	3
Stripping length (jacket)	20 mm
Temperature range	-25...+85 °C, depending on cable quality
Cables	
Cable identification	210
Cable Type	1 (PVC)
Approval (cable)	UL (AWM-Style 2464/1731), CSA
Cable weight [g/m]	29,37 g
Material wire	Cu wire, bare
Resistor (core)	max. 79 Ω/km (20 °C)
Single wire Ø (core)	0.15 mm
Construction (core)	14× 0.15 mm (multi-strand wire class 5)
Diameter (core)	3× 0.25 mm²
AWG	similar to AWG 24
Material wire isolation	PVC
Material property (wire isolation)	CFC-, cadmium-, silicone- and lead-free
Shore hardness (wire isolation)	45 ±5 D
Wire-Ø incl. isolation	1.25 mm ±5%
Color/numbering of wires	br, bk, bl
Stranding combination	3 wires twisted
Shield	no
Material jacket	PVC
Material property (jacket)	CFC-, cadmium-, silicone- and lead-free
Shore hardness (jacket)	85 ±5 A
Outer-Ø (jacket)	4.5 mm ±5%
Color (jacket)	gray
Cable print	-
chemical resistance	good resistance to oil, gasoline and chemicals
thermal resistance	flame retardant UL 1581 VW1 / CSA FT1
Nominal voltage	UL 300 V AC
Test voltage	2000 V AC
Current load capacity	to DIN VDE 0298-4
Temperature range (fixed)	-30...+80 °C

The information in this brochure has been compiled with the utmost care.
Liability for the correctness completeness and topicality of the information is restricted to gross negligence. Version: 2023-03-17

Temperature range (mobile)	-5...+80 °C
Bend radius (fixed)	5× outer Ø
Bend radius (moving)	10× outer Ø
Product article number of manufacturer	7000-08041-2100500
Cable length	5 m

The information in this brochure has been compiled with the utmost care.
Liability for the correctness completeness and topicality of the information is restricted to gross negligence. Version: 2023-03-17