DATA SHEET




# INCLINED LIQUID COLUMN MANOMETERS

## VH series

**Pressure / Depression**

The VH range of inclined liquid column manometers, developed and manufactured by Sauermann, measure slight variations in pressure, depression or differential pressure of air or gas.
They are particulary recommended for checking clogging of filters in the ventilation and dust elimination industry.

- **Horizontal "V"-shaped liquid column**
- **Dual measuring range**
- **Different sensitivity on the two measuring ranges**
- **Zero adjustment via float**
- **Compact dimensions**
- **Integrated spirit level for adjusting horizontality**

### Measuring range

| Reference | Measuring range | | | Sensitivity scale | | Resolution |
|---|---|---|---|---|---|---|
| | mm $H_2O$ | | | For 1 mm $H_2O$ | | mm $H_2O$ |
| | Total | 1st column | 2nd column | 1st column | 2nd column | 1st and 2nd column |
| VH 50 | 0 - 50 | 0 - 16 | 19 - 50 | 7 mm | 3.5 mm | 1 mm $H_2O$ or 10 Pa |
| | | Pascal | | For 10 Pa | | Pascal |
| | Total | 1st column | 2nd column | 1st column | 2nd column | 1st and 2nd column |
| | 0 - 500 | 0 - 160 | 190 - 500 | 7 mm | 3.5 mm | 1 mm $H_2O$ or 10 Pa |

Supplied with a white PVC support, 2 screws and 2 rawlplugs, two 487 connectors and a bottle of AWS 10 liquid

## General features

| | |
|---|---|
| **Recommended range of use** | From +5 to +30 °C |
| **Possible range of use** | From -30 to +60 °C |
| **Maximum static pressure** | 1 bar |
| **Manometer body** | Transparent 15 mm thick Altuglas |
| **Liquid column** | Entirely bored in the solid block, Ø 4 mm |
| **Graduation** | Directly silk-screened onto the rear face |
| **Zero adjustment** | By moving the Altuglas float and the milled, nickel-plated brass screw, travel 10 mm |
| **Positionning** | Horizontal positioning via integrated spirit level and milled, nickel-plated brass adjusting screw, vertical travel 12 mm |
| **Manometric liquid** | AWS 10 red oil, density 0.87 at 15 °C |
| **Reservoir capacity** | 20 ml |
| **Connection** | Ø 5 x 8 mm semi-rigid crystal tube, on Ø 6.2 mm ribbed, nickel-plated brass connectors, 1/8 gas thread |
| **Wall-mounted** | With or without white PVC support |

## Dimensions

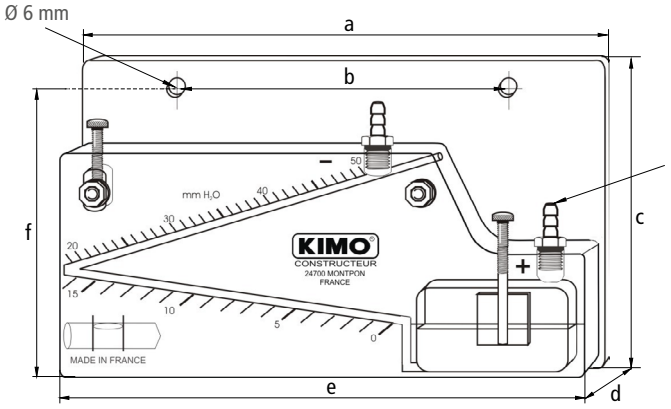


| Reference | VH 50 |
|---|---|
| a | 188 mm |
| b | 120 mm |
| c | 112 mm |
| d | 25 mm |
| e | 182 mm |
| f | 101 mm |
| Weight | 380 g |

## Mounting

1. **Mount the manometer** on a wall or a vertical partition wall with two maximum **Ø 5 x 25 mm** screws.
2. **Set horizontality** using the integrated level and the milled adjusting screw.
3. **Unscrew the connector** on the reservoir and **slowly pour the manometric liquid** to zero point on the graduation.
4. **Remount the connector** without overtightening.
5. **Connect the manometer** with the **Ø 5 x 8 mm** crystal tube to the pressure or depression source to be checked.

Note:
For a **pressure** measurement: connect the crystal tube to the **right-hand connector (+)**
For a depression measurement: connect the crystal tube to the **left-hand connector (-)**
For a differential pressure: connect the highest pressure to the **right-hand connector (+)** and the lowest pressure to the **left hand connector (-)**

**Maintenance:** VH manometers require no special maintenance other than simply changing the reading liquid once a year.

FT_EN – VH - 01/07/20 – Non-contractual document – We reserve the right to modify the characteristics of our products without prior notice.