E43307

Process adapter Varivent

ADAPT G1/2 VARIVENT D68

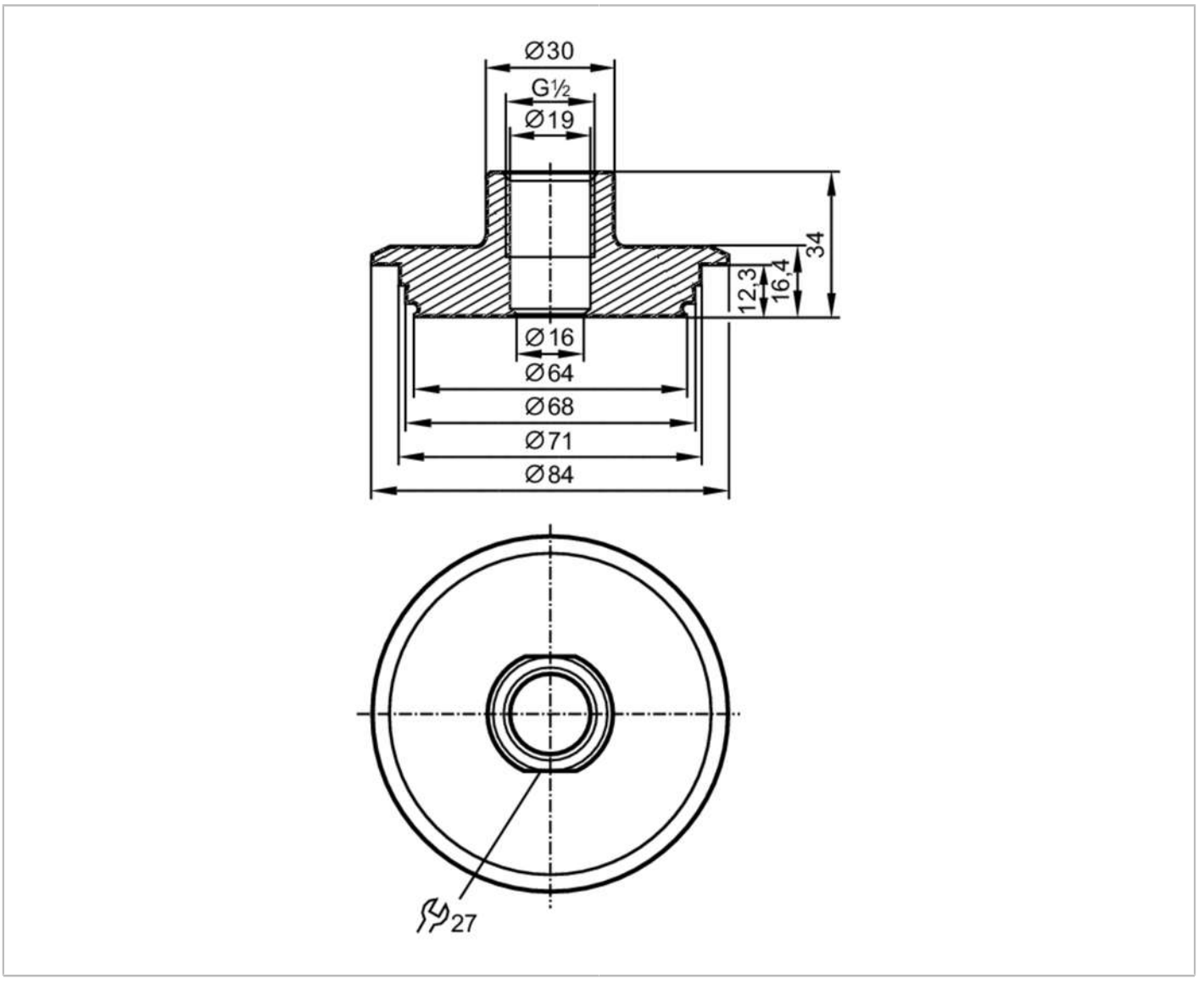

EC 1935/2004 EHEDG Tested FCM FDA

Application		
Pressure rating	[bar]	25
Mechanical data		
Weight	[g]	596
Materials		stainless steel (1.4435 / 316L)
Sensor connection		G 1/2 sealing cone
Process connection		Varivent Form N, DN40...DN150 (1,5...6"), Ø 68 mm
Surface characteristics Ra/Rz of the wetted parts		0.4 / 4
Hygienic equipment class to DIN 11866		H4
Remarks		
Pack quantity		1 pcs.