SCHMERSAL

EN Operating instructions..... pages 1 to 6
Translation of the original operating instructions

FR Vous trouverez la version actuelle du mode d'emploi dans votre langue nationale officielle sur l'Internet, www.schmersal.net.

ES Encontrará el manual de instrucciones actual en su idioma oficial de la UE en nuestra página de Internet www.schmersal.net.

NL U vindt de huidige versie van de gebruikshandleiding in uw officiële landstaal op het Internet, www.schmersal.net.

IT Il manuale d'istruzioni aggiornato nella vostra lingua (lingua ufficiale UE) è scaricabile in Internet all'indirizzo www.schmersal.net.

JP EU公用語で書かれた最新の取扱説明書は、インターネット(www.schmersal.net)からダウンロードできます。

Content

1 About this document
1.1 Function 1
1.2 Target group: authorised qualified personnel 1
1.3 Explanation of the symbols used 1
1.4 Appropriate use 1
1.5 General safety instructions 1
1.6 Warning about misuse 2
1.7 Exclusion of liability 2

2 Product description
2.1 Ordering code 2
2.2 Special versions 2
2.3 Destination and use 2
2.4 Technical data 2
2.5 Safety classification 3

3 Mounting
3.1 General mounting instructions 3
3.2 Dimensions 3

4 Electrical connection
4.1 General information for electrical connection 3
4.2 Contact variants 4

5 Set-up and maintenance
5.1 Functional testing 4
5.2 Maintenance 4

6 Disassembly and disposal
6.1 Disassembly 4
6.2 Disposal 4

7 Appendix
7.1 EC Declaration of conformity 5

1 About this document

1.1 Function

This operating instructions manual provides all the information you need for the mounting, set-up and commissioning to ensure the safe operation and disassembly of the safety switchgear. The operating instructions must be available in a legible condition and a complete version in the vicinity of the device.

1.2 Target group: authorised qualified personnel

All operations described in this operating instructions manual must be carried out by trained specialist personnel, authorised by the plant operator only.

Please make sure that you have read and understood these operating instructions and that you know all applicable legislations regarding occupational safety and accident prevention prior to installation and putting the component into operation.

The machine builder must carefully select the harmonised standards to be complied with as well as other technical specifications for the selection, mounting and integration of the components.

1.3 Explanation of the symbols used

Information, hint, note:
This symbol is used for identifying useful additional information.

Caution: Failure to comply with this warning notice could lead to failures or malfunctions.
Warning: Failure to comply with this warning notice could lead to physical injury and/or damage to the machine.

1.4 Appropriate use

The products described in these operating instructions are developed to execute safety-related functions as part of an entire plant or machine. It is the responsibility of the manufacturer of a machine or plant to ensure the proper functionality of the entire machinery or plant.

The safety switchgear must be exclusively used in accordance with the versions listed below or for the applications authorised by the manufacturer. Detailed information regarding the range of applications can be found in the chapter "Product description".

1.5 General safety instructions

The user must observe the safety instructions in this operating instructions manual, the country-specific installation standards as well as all prevailing safety regulations and accident prevention rules.

Further technical information can be found in the Schmersal catalogues or in the online catalogue on the Internet: www.schmersal.net.

The information contained in this operating instructions manual is provided without liability and is subject to technical modifications.

If multiple safety components are wired in series, the Performance Level to EN ISO 13849-1 will be reduced due to the restricted error detection under certain circumstances. The entire concept of the control system, in which the safety component is integrated, must be validated to EN ISO 13849-2.

There are no residual risks, provided that the safety instructions as well as the instructions regarding mounting, commissioning, operation and maintenance are observed.

x.500 / v.A. / 08.2009 / BZ-Nr. 50122-20V900 / Teile-Nr. 1122371-EN / Ausgabe Q

1.6 Warning about misuse

In case of inadequate or improper use or manipulations of the safety switchgear, personal hazards or damage to machinery or plant components cannot be excluded. The relevant requirements of the standard EN 1088 must be observed.

1.7 Exclusion of liability

We shall accept no liability for damages and malfunctions resulting from defective mounting or failure to comply with this operating instructions manual. The manufacturer shall accept no liability for damages resulting from the use of unauthorised spare parts or accessories.

For safety reasons, invasive work on the device as well as arbitrary repairs, conversions and modifications to the device are strictly forbidden; the manufacturer shall accept no liability for damages resulting from such invasive work, arbitrary repairs, conversions and/or modifications to the device.

2 Product description

2.1 Ordering code

This operating instructions manual applies to the following types:

AZM 170①-②Z③K④-⑤-⑥-⑦		
No.	**Option**	**Description**
①		Cut clamps
	SK	Screw terminals
②	11	1 NO/1 NC contact
	02	2 NC contacts
③		Latching force 5 N
	R	Latching force 30 N
④		Power to unlock
	A	Power to lock
⑤		Cable gland
	ST	M12 x 1 connector
	ST-2431	M12 x 1 connector, separated magnet monitoring
⑥	24 VAC/DC	U_s 24 VAC/DC
	110 VAC	Us 110 VAC
	230 VAC	Us 230 VAC
⑦		Manual release
	2197	Lateral manual release (default in the connector and power-to-unlock version)
	1637	Gold-plated contacts

Only if the information described in this operating instructions manual are realised correctly, the safety function and therefore the compliance with the Machinery Directive is maintained.

2.2 Special versions

For special versions, which are not listed in the order code below 2.1, these specifications apply accordingly, provided that they correspond to the standard version.

2.3 Destination and use

The solenoid interlock has been designed to prevent movable safety guards in conjunction with the control part of a machine from being opened before hazardous conditions have been eliminated.

Interlocks with power to lock principle may only be used in special cases after a thorough evaluation of the risk of accident, since the safety guard can be opened immediately on failure of the power supply or upon activation of the main switch.

Manual release

A manual release is available as a mounting tool and in the event of a power failure in case the power to unlock principle is used. If the triangular key is turned 180°, the locking bolt is pulled into the unlocking position. Please ensure that jamming by external influence on the actuator is avoided. The normal locking function is only restored after the triangular key has been returned to its original position. After being put into operation, the manual release must be secured by installing the sealing plug, which is included in delivery.

Manual release

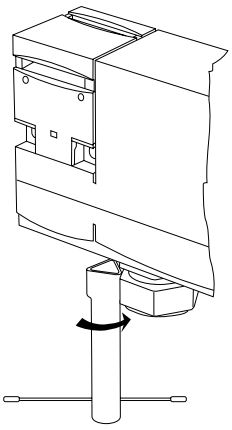

Manual release from side

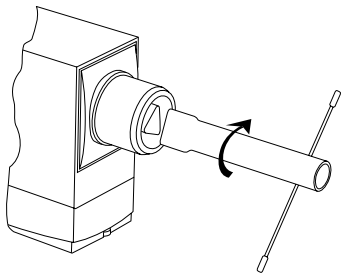

Ordering suffix -2197 or ST

Emergency exit

Fitting and actuation only from within the hazardous area.

2.4 Technical data

Standards:	IEC/EN 60947-5-1; EN ISO 13849-1; EN 1088; BG-GS-ET-19
Enclosure:	glass-fibre reinforced thermoplastic, self-extinguishing
Actuator and locking bolt:	stainless steel 1.4301
Contact material:	Silver
Protection class:	IP 67
Contact types:	change-over contact with double break, type Zb or 2 NC contacts, with galvanically separated contact bridges
Switching system:	⊖ to IEC 60947-5-1; slow action, positive break NC contact
Cable entry:	M20 x 1,5
Termination:	Cut clamps, screw terminals or M12 connector
Cable type:	flexible
Cable section:	IDC method of termination (cut clamps): 0.75...1.0mm² Screw terminals: 0.25...1.5mm² (incl. insulated conductor ferrules)
U_{imp}:	4 kV
U_i:	250 V
Ith:	6 A
Utilisation category:	AC-15, DC-13
I_e/U_e:	4 A / 230 VAC; 4 A / 24 VDC
Max. fuse rating:	6 A gG D-fuse
Positive break travel (unlocked):	11 mm
Positive break force (unlocked):	each NC contact 8.5 N
Solenoid:	100% ED
U_s:	24 VAC/DC; 110 VAC 50/60 Hz; 230 VAC 50/60 Hz
Power consumption:	max. 10 W
Ambient temperature:	– 25 °C … + 60 °C
Mechanical life:	> 1 million operations
F_{max}:	1000 N
Latching force:	30 N for ordering suffix R
Actuating speed:	max. 2 m/s
Actuating frequency:	max. 1000 operations / h

2.5 Safety classification

Standards:	EN ISO 13849-1
B_{10d} (NC contact):	2,000,000
Service life:	20 years

$$MTTF_d = \frac{B_{10d}}{0{,}1 \times n_{op}} \qquad n_{op} = \frac{d_{op} \times h_{op} \times 3600\ s/h}{t_{cycle}}$$

(Specifications can vary depending on the application-specific parameters h_{op}, d_{op} and t_{cycle} as well as the load.)

3 Mounting

3.1 General mounting instructions

Two mounting holes are provided for fixing the enclosure. The solenoid interlock has double insulation. The use of a protective ground wire therefore is not authorised. The solenoid interlock must not be used as an end stop. Any mounting position. The mounting position however must be chosen so that the ingress of dirt and soiling in the used opening is avoided. The unused opening must be sealed by means of slot sealing plugs. Tightening force for the Torx T10 cover screws 0.7 ... 1 Nm.

Please observe the remarks of the standards EN ISO 12100, EN 953 and EN 1088.

3.2 Dimensions

All measurements in mm.

AZM 170 with cut clamps and cable entry

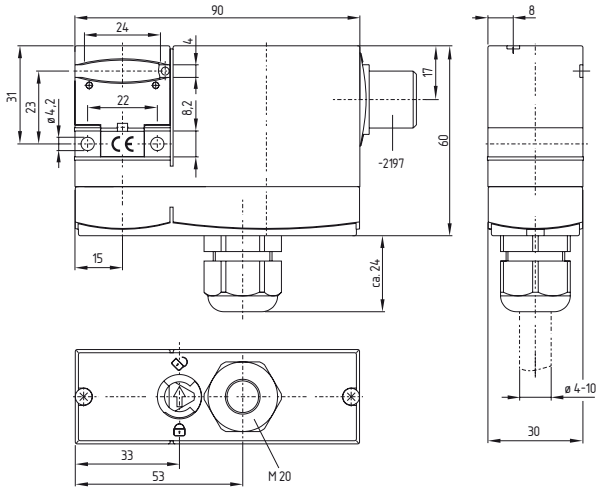

AZM 170SK with screw terminals and cable entry

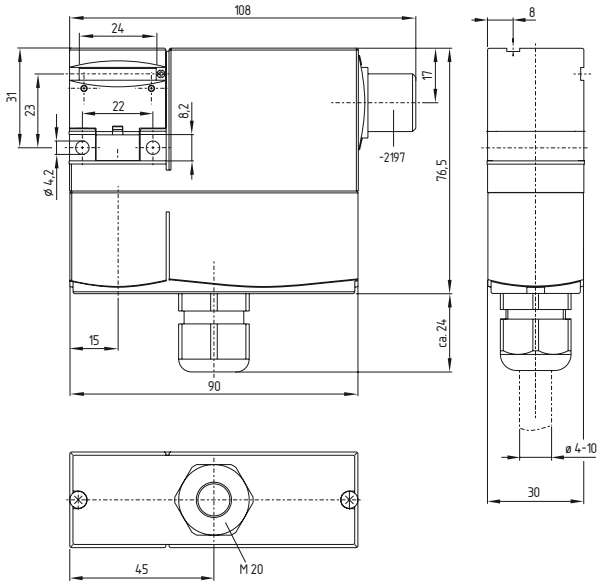

Legend: manual release from side, ordering suffix -2197

AZM 170...-ST with connector, A- or B-coding

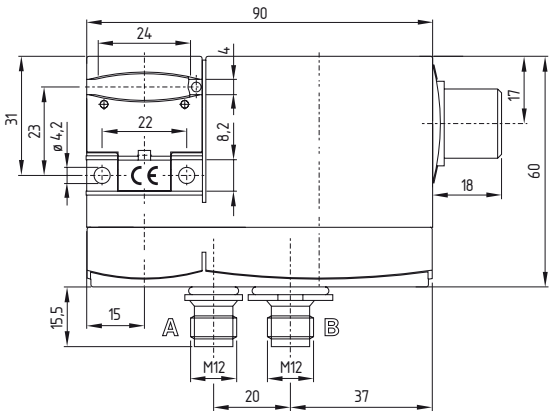

Mounting of the actuator

See actuator mounting instructions.

4 Electrical connection

4.1 General information for electrical connection

The electrical connection may only be carried out by authorised personnel in a de-energised condition.

At least one magnetic contact ⊖ with positive break must be integrated in the safety circuit.

For the cable entry, suitable cable glands with an appropriate degree of protection must be used. The thin walls of the mounting holes are removed when the cable gland is screwed in.

Cut-clamp technology
The IDC method of termination (cut clamp technology) enables connecting flexible wires with cable section 0.75 - 1 mm² without using conductor ferrules. To this effect, strip the wire according to the drawing (refer to the wiring example) and insert it into the cable gland, close the cable gland, push the conductors in the groove of the cover (refer to wiring example) and screw the cover back. Observe that the individual conductors remain in position to avoid jamming.

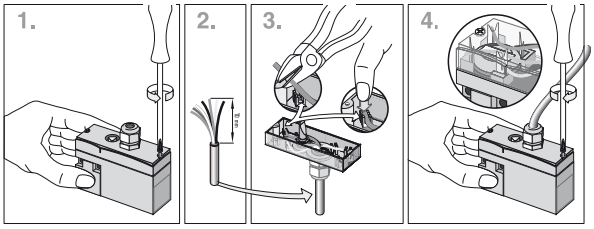

Screw Terminal method of termination (SK version)
Unscrew the cover of the enclosure. Connect the cables to the terminal block. Use insulated conductor ferrules to that effect. Screw the cover back on the enclosure.

4.2 Contact variants
Contacts shown in a de-energised condition and with the actuator inserted.

Power to unlock

1 NO contacts / 1 NC contacts

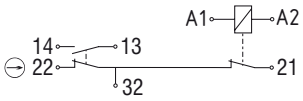

2 NC contacts

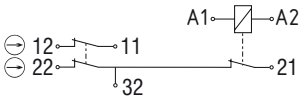

Power to lock

1 NO contacts / 1 NC contacts

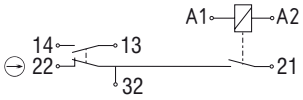

2 NC contacts

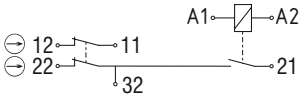

Power to unlock connector

1 NO contacts / 1 NC contacts

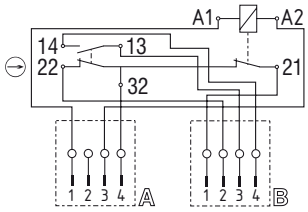

2 NC contacts

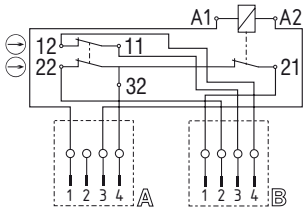

Power to lock connector

1 NO contacts / 1 NC contacts

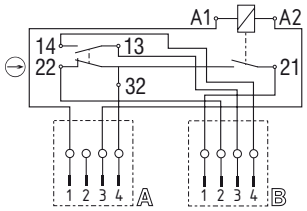

2 NC contacts

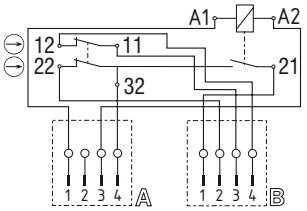

Ordering suffix -ST-2431 separated magnetic force monitoring, 2 NC contacts

Power to unlock

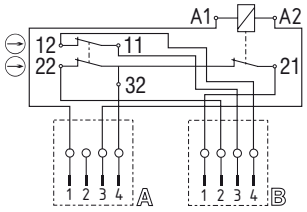

Power to lock

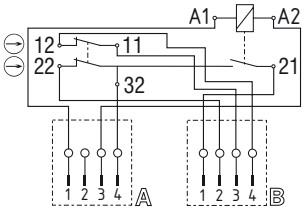

5 Set-up and maintenance

5.1 Functional testing
The safety function of the safety components must be tested. The following conditions must be previously checked and met:
1. Fitting of the solenoid interlock and the actuator
2. Check the integrity of the cable entry and connections
3. Check the switch enclosure for damage.

5.2 Maintenance
A regular visual inspection and functional test, including the following steps, is recommended:
Check for tight installation of the actuator and the switch
2. Remove particles of dust and soiling
3 Check cable entry and connections

Damaged or defective components must be replaced.

6 Disassembly and disposal

6.1 Disassembly
The safety switchgear must be disassembled in a de-energised condition only.

6.2 Disposal
The safety switchgear must be disposed of in an appropriate manner in accordance with the national prescriptions and legislations.

7.1 EC Declaration of conformity

SCHMERSAL

EC Declaration of conformity

Translation of the original declaration of conformity

K.A. Schmersal GmbH
Industrielle Sicherheitsschaltsysteme
Möddinghofe 30 ▪ 42279 Wuppertal
Germany
Internet: www.schmersal.com

We hereby certify that the hereafter described safety components both in its basic design and construction conform to the applicable European Directives.

Name of the safety component / type:	AZM 170
Description of the safety component:	Interlocking device with electromagnetic interlock for safety functions
Harmonised EC-Directives:	2006/42/EC EC-Machinery Directive 2004/108/EC EMC-Directive
Person authorized for the compilation of the technical documentation:	Ulrich Loss Möddinghofe 30 42279 Wuppertal
Place and date of issue:	Wuppertal, March 5, 2010

Authorised signature
Heinz Schmersal
Managing Director

AZM 170-D-EN

Note
The currently valid declaration of conformity can be downloaded from the internet at www.schmersal.net.

CE

K. A. Schmersal GmbH
Industrielle Sicherheitsschaltsysteme
Möddinghofe 30, D - 42279 Wuppertal
Postfach 24 02 63, D - 42232 Wuppertal

Telefon +49 - (0)2 02 - 64 74 - 0
Telefax +49 - (0)2 02 - 64 74 - 1 00
E-Mail: info@schmersal.com
Internet: http://www.schmersal.com