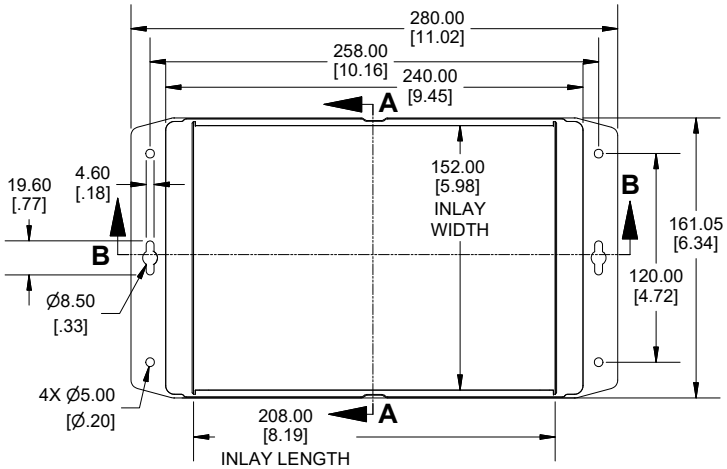

ENCLOSURE ASSEMBLY TOP VIEW

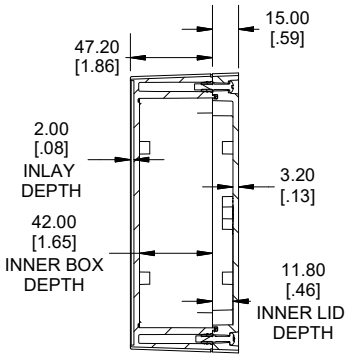

SECTION A-A
END VIEW

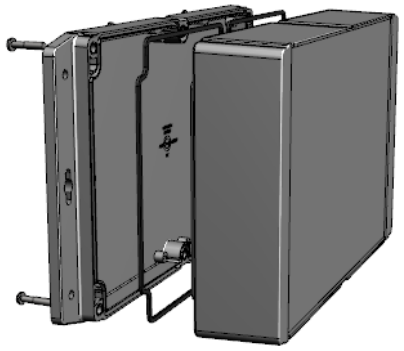

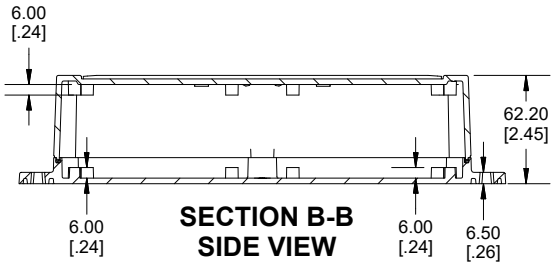

SECTION B-B
SIDE VIEW

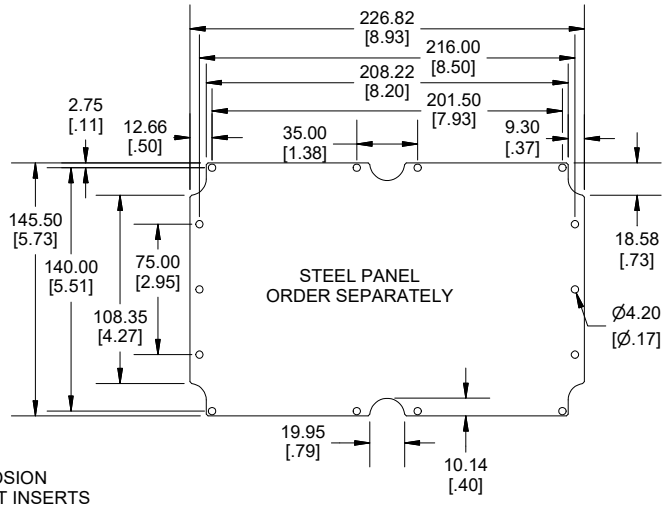

POLYCARBONATE
VERSION ONLY
c UL us LISTED
FILE #E65324
TYPE 4,4X,6,6P

Enclosures can be Factory Modified (Milling, Drilling, Printing etc.)
Contact Factory (modshop@hammfg.com) for quotes
Solid models of this enclosure available in .stp or .x_t
(Part number and text placement/orientation on our products are subject to change, we do not recommend using them as a locating reference for modification purposes)

NOTE
Purchased assembly includes styled box, flanged lid, 6 cover screws, and preformed silicone gasket.
General Purpose ABS version is not UL approved. (Matl UL94 - HB)
Polycarbonate version is UL 508 approved. (Matl UL94 - 5VA @ 3mm)
Recommended Cover screw torque -- 2.5 lbf-in (30 cN-m)

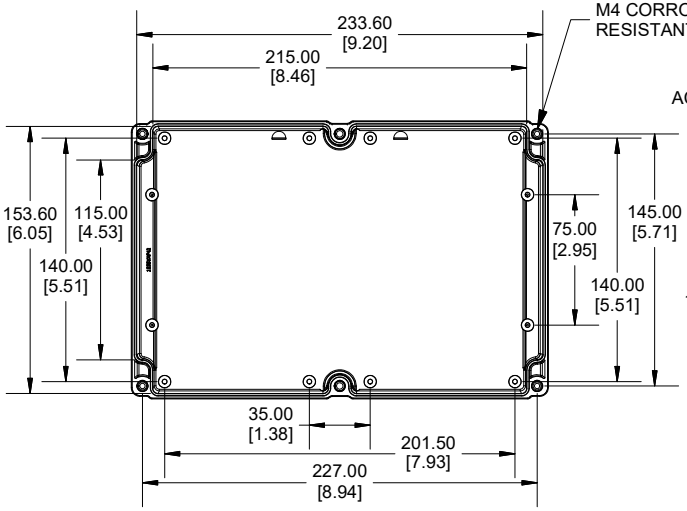

INSIDE BOX VIEW

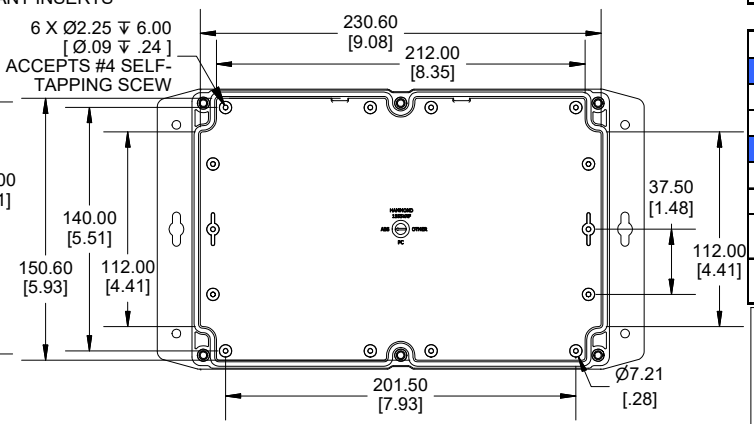

INSIDE LID VIEW

1555VAF	
1555VAF Regular Enclosure	
General Purpose ABS RAL-7035	1555VAF42GY
Polycarbonate RAL-7035	1555VA2F42GY
ACCESSORIES	
Steel Inner Panels	1554VAPL
Silicone Pre-formed Gasket Black (Pkg 2)	1554VAGASKET
Steel Panel / P.C. Board Self Tapping Screw [#4 X 1/4" (6.4mm) Plated]	1555TS100
Stainless Steel Cover Screws [M4-0.7 X 20mm] (Pkg 50)	SC576-50

Dimensions:
mm
[inches]

HAMMOND MANUFACTURING®

1555VAF42

www.hammondmfg.com

REV 23.08.2022