Brand of NTN corporation

Technical data

BBE30AUU-OP

Standard ball bushings open



VISUAL (S)

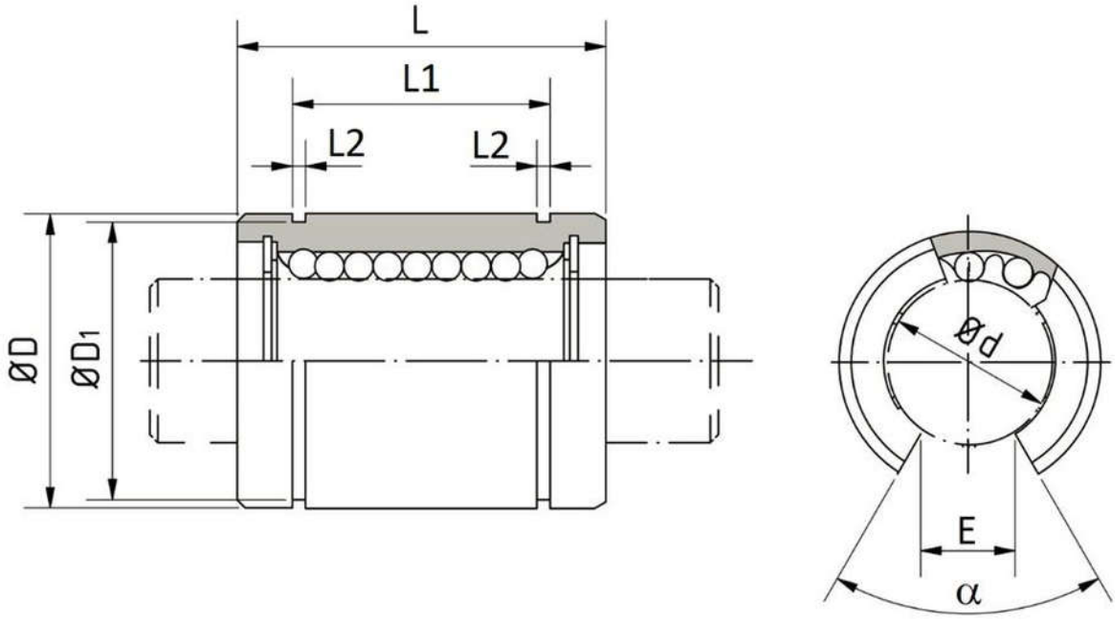

PRODUCT DEFINITION

Brand	SNR
Design type	BBE-OP
Ball bushings category	Standard ball bushings, open
Standard	ISO dimension
Number of seals	2
Material outer cylinder or steel segments	100Cr6
Material Cage	RSt34-2
Initial greasing	Non/No
d - Internal diameter	30 mm

BBE30AUU-OP
Standard ball bushings open

PRODUCT DEFINITION	
d - Internal diameter tolerance	0,011/-0,001
D - External diameter	47 mm
D - External diameter tolerance	0/-0,011
L - Length	68 mm
L - Length tolerance	0/-0,3
L1	52,1 mm
L1 tolerance	0/-0,3
D1 - Diameter	44,5 mm
L2	1,85 mm
E	12,5 mm
Alpha	50 °
Number of ball rows	5
Mass	0,309 kg

PRODUCT PERFORMANCE	
Cmin	1,584 kN
Cmax	1,584 kN
C0min	2,74 kN
C0max	2,74 kN
Crev for OP	902.88
C0rev for OP	1561.8
Tmin - Min operating temperature	-20 °C
Tmax - Max operating temperature	110 °C

ESHOPDONOTDISPLAY

BBE30AUU-OP
Standard ball bushings open

ESHOPDONOTDISPLAY	
Reference	BBE30AUU-OP
Image	BBE-OP_1.JPG, BBE-OP_3.JPG
Send to Eshop	Yes
Send to Paper Catalog	Yes
Tracepart	Oui/Yes