DPM 750S-EB-W

3½ Digit Backlit LCD Voltmeter Module

ORDERING INFORMATION

Description	Stock No.
White Backlighting	DPM 750S-EB-W



FEATURES

- 12.7mm (0.5”) Digit Height
- 200 mV D.c. Full Scale Reading
- 5V d.c. Operation
- Auto-zero and Auto-polarity
- Programmable Decimal Points
- Enhanced black LCD with LED Backlighting
- Low Battery Warming
- Bandgap Reference

The DPM 750S-EB-W features an enhanced black LCD and 200mV d.c. measurement range with auto-zero and autopolarity. Decimal points are user selectable. The meter features a negative rail generator which enables the meter to measure a signal referenced to its own power supply GND. A low drift bandgap reference circuit ensures accurate readings over a wide temperature range. Enhanced contrast negative mode LCD with white LED backlighting ensures excellent readability under low light conditions. The module’s integral window format means it will suit both high and low volume applications. This module is supplied with a plastic mounting bezel. A waterproof seal to IP67 / NEMA 4X is achievable, using the optional BEZ 700-IP bezel.

Specifications		Min.	Typ.	Max.	Unit
Accuracy (overall error) *			0.1		% (± 1 count)
Linearity				±1	count
Sample rate			2.5		samples/sec
Operating temperature range		0		50	°C
Temperature stability			50		ppm/°C
Supply voltage		4.75	5	7.5 **	V d.c.
Supply current @ 5V d.c.	Display on		40	80 ***	mA
	Display disabled		350		µA
Input leakage current (Vin = 0V)			1	10	pA

* To ensure maximum accuracy, re-calibrate periodically.
** Operation of the meter beyond the maximum supply voltage rating can cause permanent damage to the meter.
*** An external series resistor is required above 5V, see Applications. This specification linearly derates to 30mA @ 50°C.

Unless otherwise noted, specifications apply at T_A =25°C, V_{supply} =5Vd.c. (f_{clock} =40kHz) and are tested with the module configured for floating input mode.

SAFETY

To comply with the LowVoltage Directive (LVD93/68/EEC), input voltages to the module’s pins must not exceed 60Vdc. The user must ensure that the incorporation of the panel meter into the user’s equipment conformsto therelevant sections of BS EN 61010 (Safety Requirements for Electrical Equipment for Measuring, Control and Laboratory Use).

DIMENSIONS

All dimensions in mm (inches)

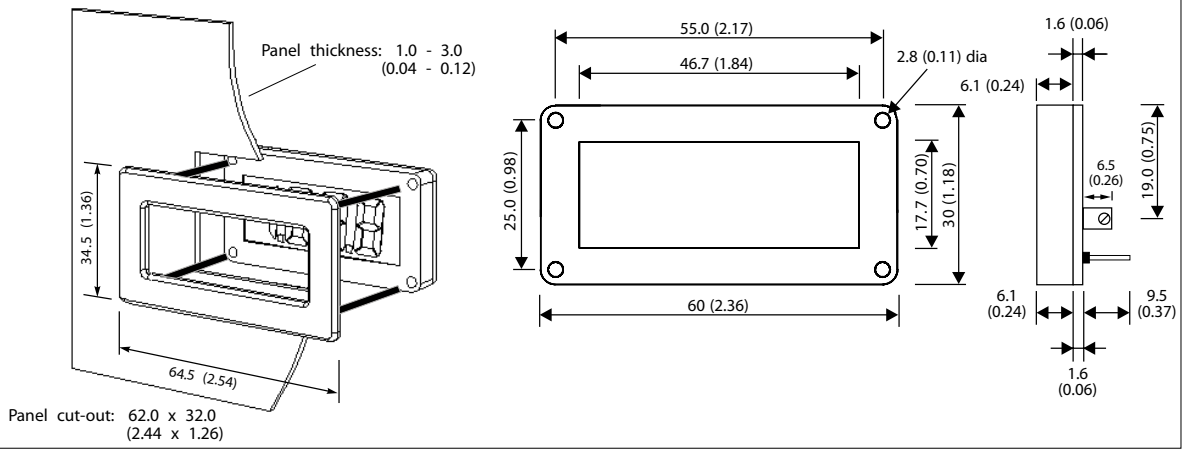

PANEL FITTING

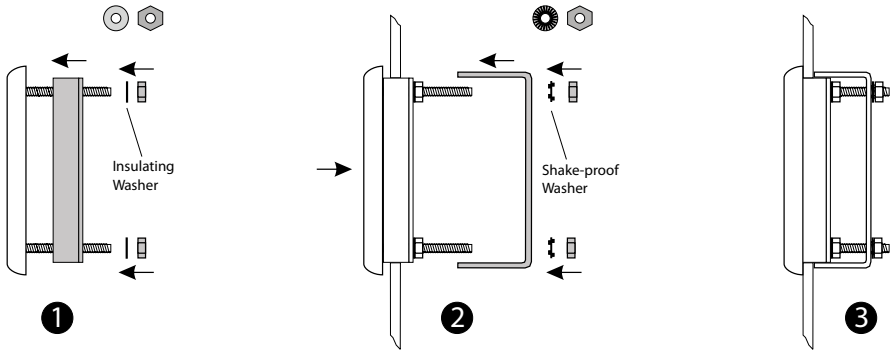

FUNCTIONAL BLOCK DIAGRAM

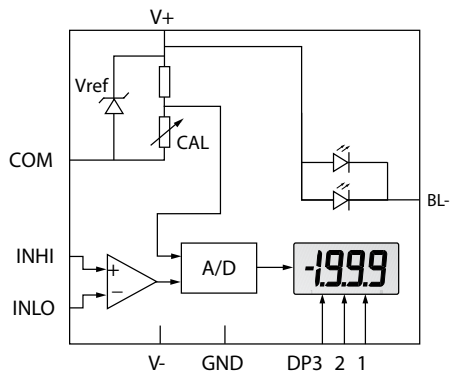

PIN CONFIGURATION (rear view)

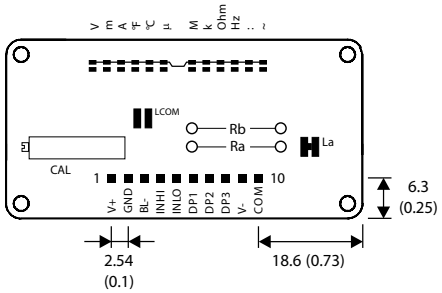

CIRCUIT DIAGRAM

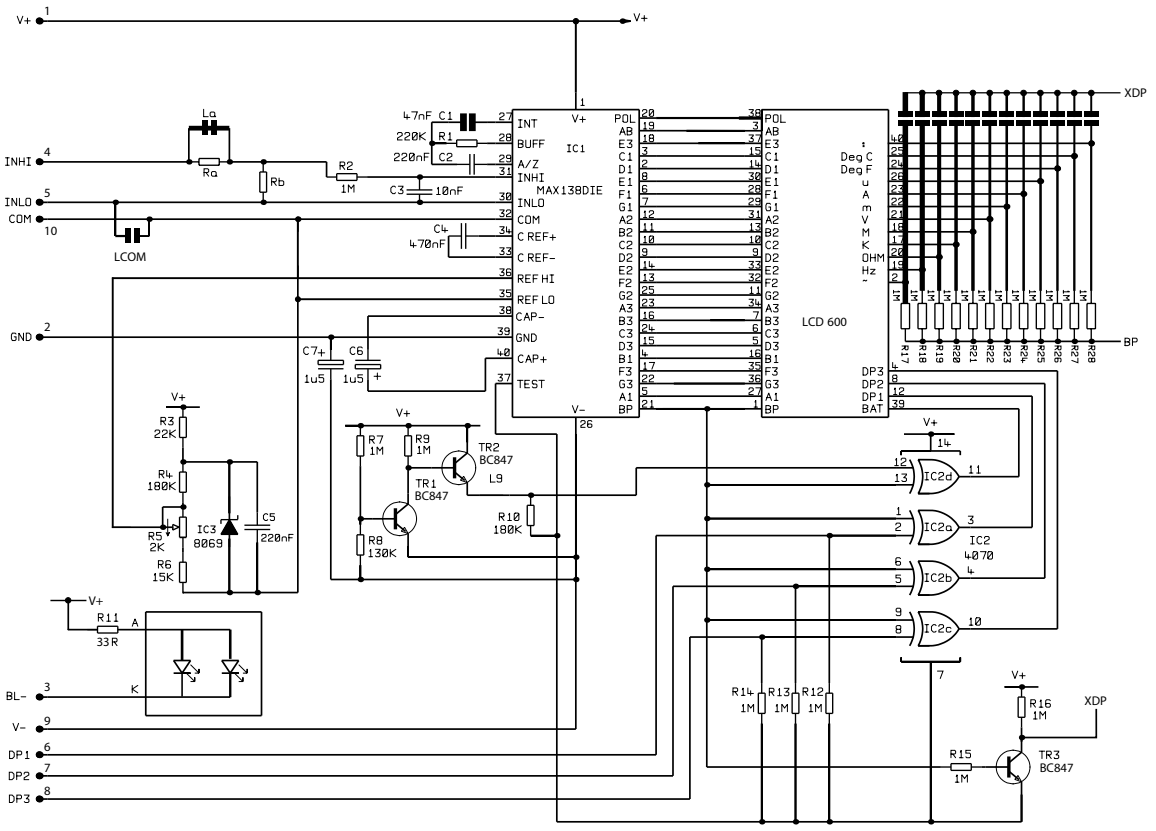

PIN FUNCTIONS

1. V+ Positive power supply to the meter and LED backlighting.
2. GND 0V power supply to the meter.
3. BL- Negative power supply to the LED backlighting.
4. INHI Positive measuring input.
5. INLO Negative measuring input.
6. DP1 Connect to V+ to display DP1 (199.9).
7. DP2 Connect to V+ to display DP2 (19.99).
8. DP3 Connect to V+ to display DP3 (1.999).
9. V- N.C. (inversion of V+).
10. COM Ground for the analogue section of the A/D converter.
    It is actively held at 3.05V (nom.) below V+ and must not be allowed to sink excessive current (>100 µA) by, for instance, connecting to a higher voltage.

Note:

A negative supply (V-) is generated internally and mirrors the positive supply. For example: if V+ is +5V, then the internally generated V- is -5V. When measuring with the input referenced to the same supply rail as that of the panel meter, then the limitations on the input range are (V- + 1.5V) to (V+ - 1.5V).

SOLDER LINKS

LCOM Normally Open. When soldered, connects COM to INLO.
La Normally Closed. Short circuits the scaling resistor Ra, if Ra is fitted on the module.

SCALING

Two resistors Ra and Rb may be used to alter the full scale reading (FSR) of the meter - see table. The meter will have to be re-calibrated by adjusting the calibration potentiometer on the rear of the module.

	FSR	Ra	Rb
Voltage Vin	2V	910k	100k
	20V	1M	10k
	200V	1M	1k
	2000V*	1M	100R
Current Iin	200µA	0R	1k
	2mA	0R	100R
	20mA	0R	10R
	200mA	0R	1R

*Ensure that Ra is rated for high voltage use.

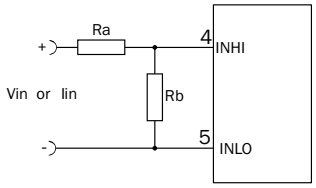

APPLICATIONS

Do not connect more than one meter to the same power supply if the meters cannot use the same signal ground. Taking any input beyond the power supply rails will damage the meter.

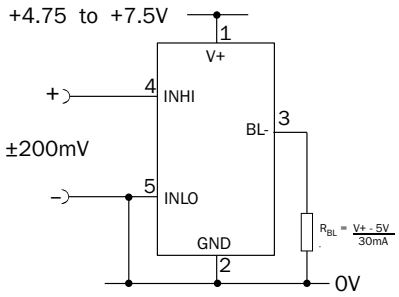

Measuring a single ended input voltage referenced to supply, i.e. the input voltage and the meter's power supply share the same 0V rail. Ensure solder link LCOM is open.

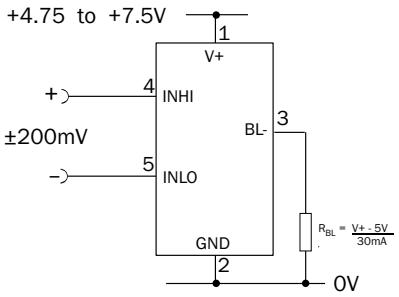

Measuring an input voltage referenced to a floating supply, i.e. the input voltage and the meter's power supply are isolated from each other. Ensure solder link LCOM is closed.

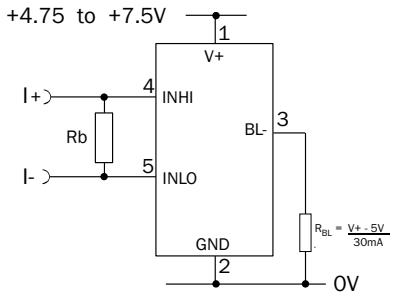

Measuring a current from a circuit which is floating with respect to the DPM's supply, i.e. the current and the meter's power supply are isolated from each other. Ensure solder link LCOM is closed.

Disable the display to produce supply current

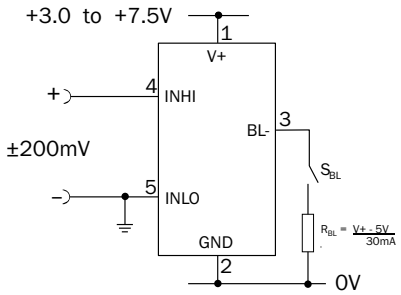

Measuring a single ended input voltage referenced to a split supply, i.e. the input voltage and the meter's power supply share the same 0V rail. Ensure solder link LCOM is open.