ifm electronic

Installation Instructions
Flow sensor

efector300®

SFD

UK

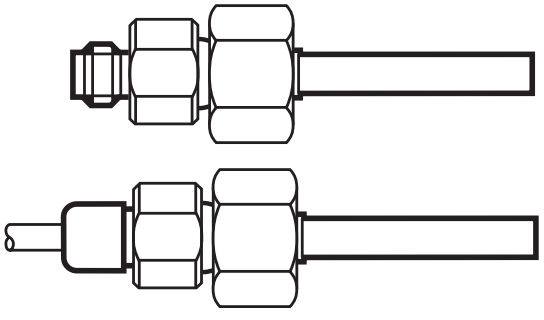

701523 / 04 05 / 2009

Function and features

In conjunction with the VS3000 control monitor the flow sensor monitors flows in liquids and gases.
The sensor / control monitor combination senses whether a preset flow value has been reached (= medium flowing) or not (= medium not flowing) and provides a switched signal.

Installation

The unit is adaptable for various process fittings (adapters to be ordered separately as accessories).

- In the case of horizontal pipes mount the unit from the side, if possible (fig. 1).
  When the unit is to be mounted at the bottom of the pipe, it should be free from deposits.
  When the unit is to be mounted at the top of the pipe, it should be completely filled with the medium to be monitored.
- In the case of vertical pipes mount the unit in a place where the medium flows upwards (fig. 2).

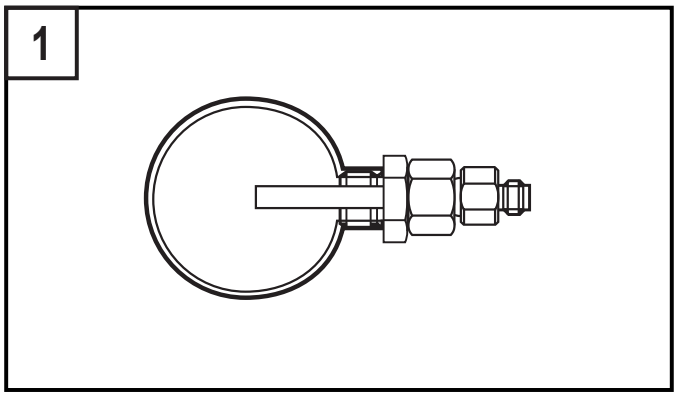

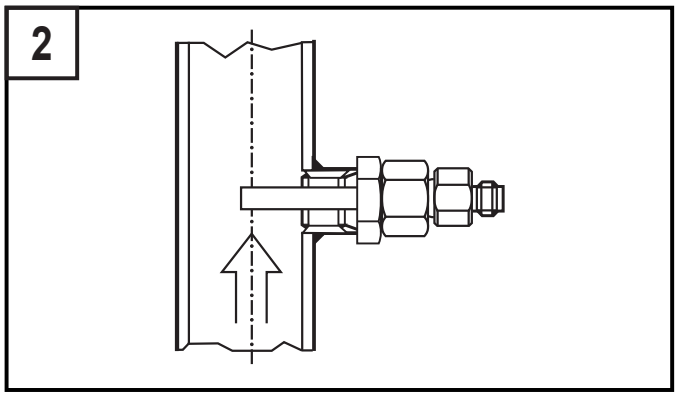

Components integrated in the pipes, bends, valves, reductions, etc. lead to turbulence of the medium. This affects the function of the unit.
Recommendation: Adhere to the distances between sensor and sources of interference:

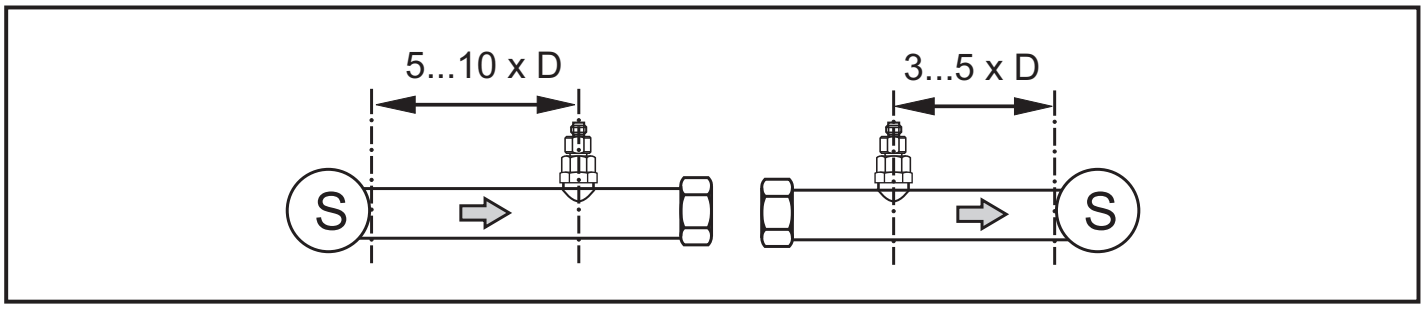

D = pipe diameter; S = sources of interference

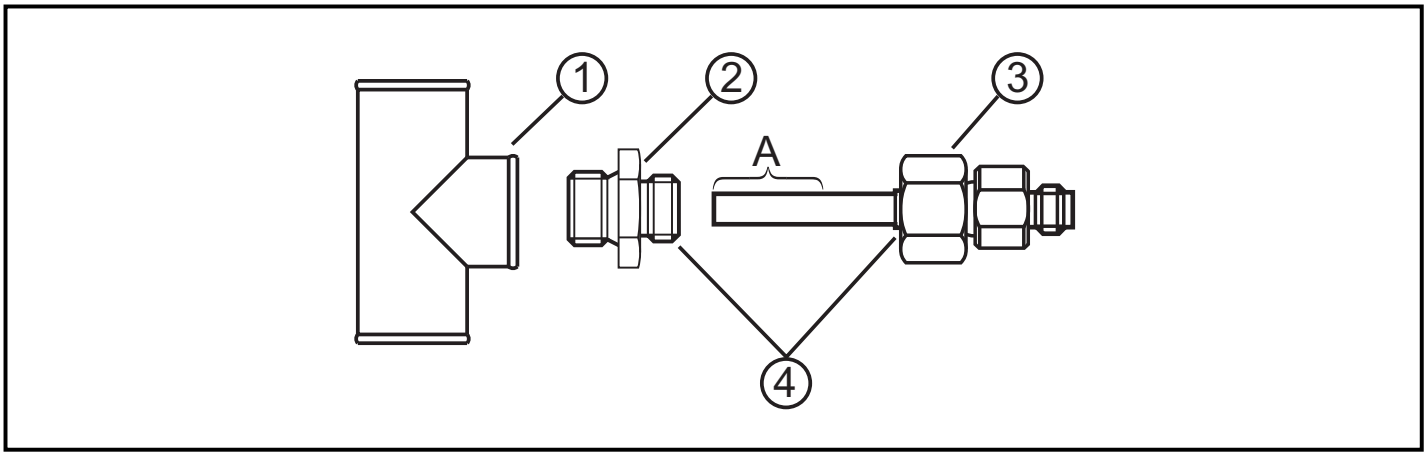

4: thread M18 x 1.5

1. Lubricate the nut (3) and all threads with grease to ensure the nut can be loosened and tightened several times.
   Note: No grease must be applied to the sensor tip (A).
2. Screw the suitable adapter (2) onto the process fitting (1).
3. Insert the flow sensor into the adapter and tighten the nut (3); (max. tightening torque 50 Nm).

Insertion depth of the sensor: min. 12 mm in the pipe. When the adapters are used which are available as accessories the correct depth is ensured.
Note: The sensor tip must not touch the pipe wall.

mounting dimension with M12 adapter	mounting dimension with G¼ adapter	mounting dimension with G½ adapter
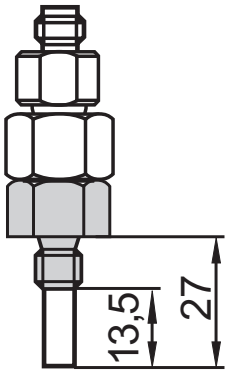	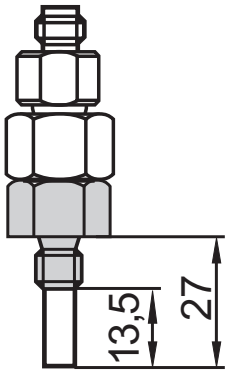	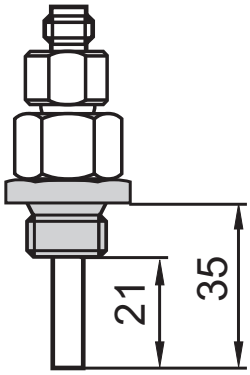

Electrical connection

Connection to control monitor VS3000; voltage supply to EN50178, SELV, PELV.
The unit must only be connected by an electrician.
The national and international regulations for the installation of electrical equipment must be observed.

For units with cULus approval and the scope of validity cULus:

The device shall be supplied from an isolating transformer having a secondary Listed fuse rated either

a) max 5 amps for voltages 0~20 Vrms (0~28.3 Vp) or

b) 100/Vp for voltages of 20~30 Vrms (28.3~42.4 Vp).

Scale drawing

1

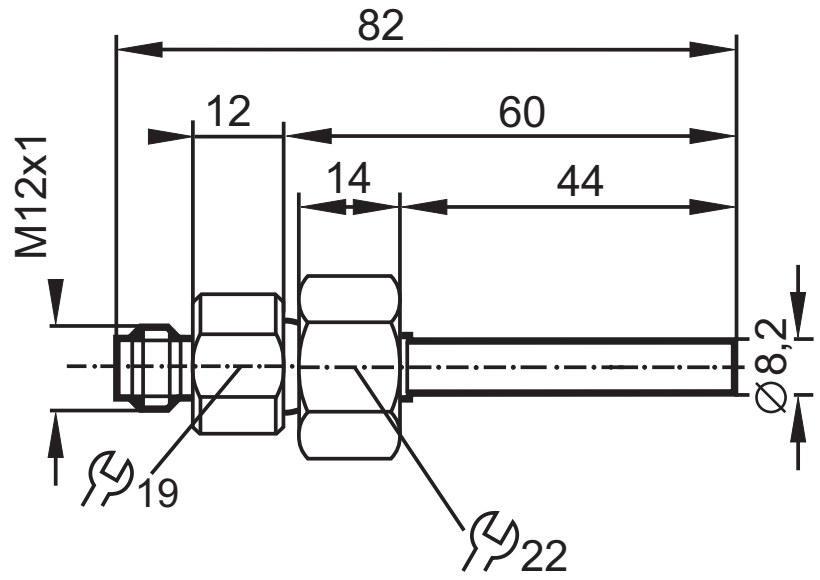

2

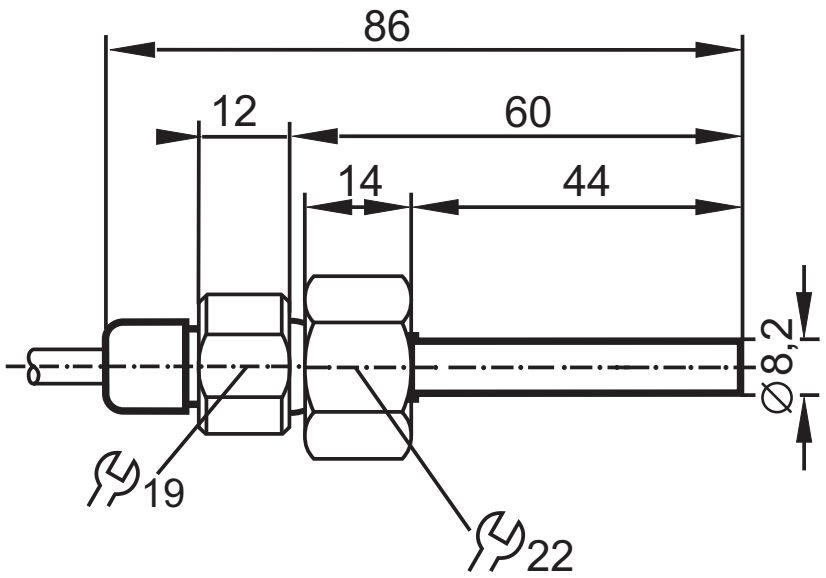

Dimensions are in millimeters

1: Sensors with connector

2: Sensors with cable connection