

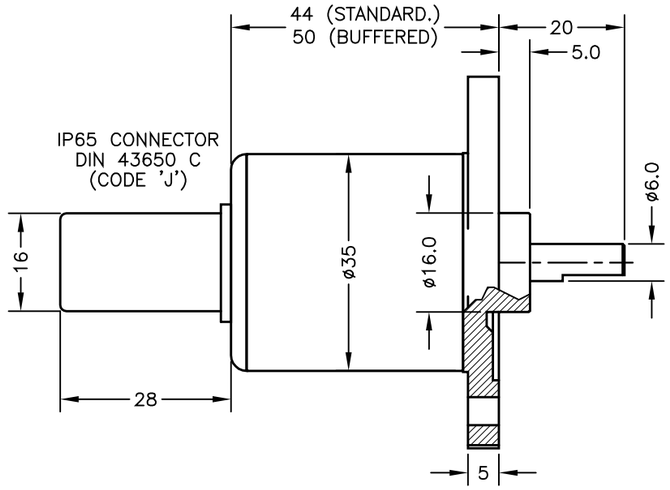

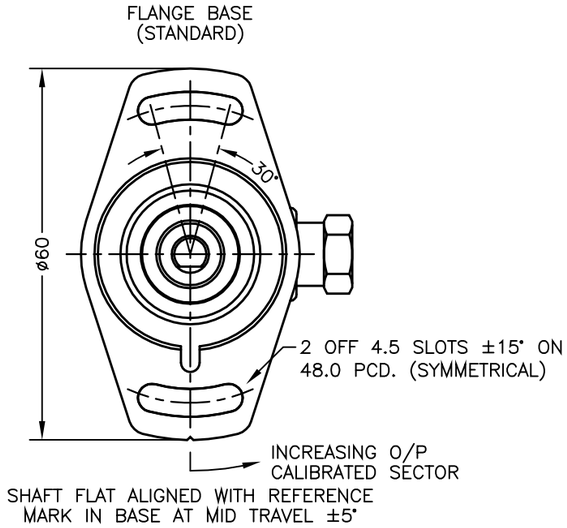

ELECTRICAL OPTIONS/ SPECIFICATIONS

OUTPUT OPTION	OUTPUT	SUPPLY	
A	0.5 TO 4.5V RATIOMETRIC	5V	STANDARD
B	±5V	±15V	BUFFERED
C	0.5 TO 9.5V	24V	BUFFERED
D	±10V	±15V	BUFFERED
G	0.5 TO 4.5V	24V	BUFFERED
	SUPPLY CURRENT 12mA TYP. 20mA MAX.		BUFFERED
E	4 TO 20mA 2–WIRE	24V	BUFFERED
F	4 TO 20mA 3–WIRE SINK	24V	BUFFERED
H	4 TO 20mA 3–WIRE SOURCE	24V	BUFFERED

SINK VERSION OUTPUT COMPLIANCE 5–28V
SOURCE VERSION DRIVE 300Ω MAX TO 0V

CABLE: 0.2mm², O/A SCREEN, PUR JACKET – SUPPLIED WITH 50cm OR REQUIRED LENGTH IN cm. e.g. 'L50'
3–CORE: JACKET ø4mm
4–CORE: JACKET ø4.6mm
CABLE/CONNECTOR* CONNECTIONS;

3 CORE	4 CORE	CONNECTOR	
RED	RED	:1	+Ve
BLACK	GREEN	:3	0V
	YELLOW	:4	–Ve – OPTIONS: B OR D
WHITE	BLUE	:2	OUTPUT
SCREEN	SCREEN	:4	BODY – OPTIONS: A, C, E–H

*CONNECTORS; MAXIMUM CONDUCTOR CROSS SECTION 0.75mm²

RANGE OF DISPLACEMENT FROM 0–16° TO 0–160° e.g.76°, IN INCREMENTS OF 1°.

BODY MATERIAL:– STAINLESS STEEL.
FLANGE BASE MATERIAL:– ALUMINIUM.
SERVO MOUNT MATERIAL:– ALUMINIUM.

FURTHER OPTIONS:

SPRING RETURN (CODE 'N') AVAILABLE UP TO ±50°
CALIBRATED OUTPUT, PHYSICAL STOPS ±55°
NOTE STANDARD DEVICE HAS NO STOPS.

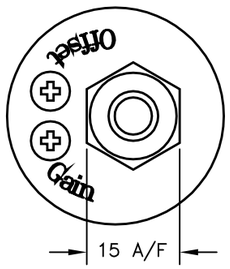

IP67 CABLE GLAND
(CODE 'Lxx')

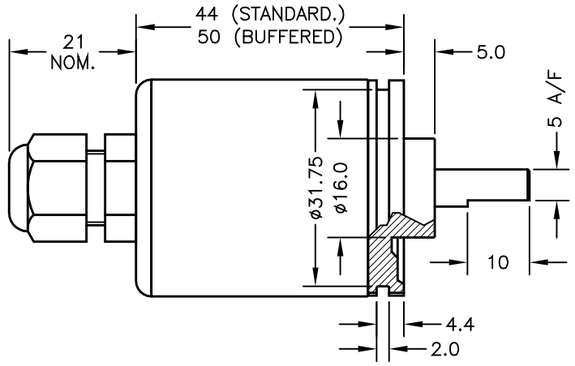

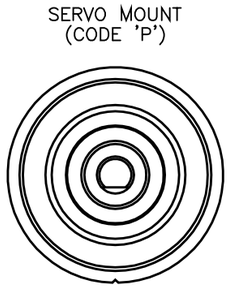

GAIN AND OFFSET ADJUSTMENTS
SEALED (CODE 'Y')

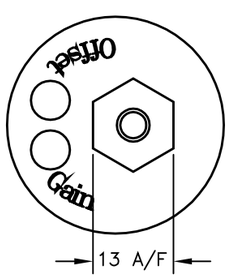

IP67 SHORT CABLE GLAND
– AXIAL (CODE 'Mxx')

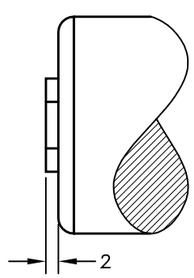

N	ELEC. OPTIONS AMENDED.	PDM
O	FLANGE TH'KNESS ADDED.	PDM
P	ADDITIONAL DIMS/VIEWS ADDED.	PDM
Q	DISP. 16 TO 160° WAS 20 TO 160° RAN442	PDM
R	RANGE NOTE AMENDED ~ RAN1200	PDM

CE

DRAWINGS NOT TO BE CHANGED WITHOUT REFERENCE TO THE CHANGE PROCEDURE.
CHANGES TO PARTS USED IN INTRINSICALLY SAFE PRODUCT MUST BE APPROVED BY THE AUTHORISED PERSON
THIS IS AN UNCONTROLLED PRINT AND WILL NOT BE UPDATED.

POSITEK LIMITED

N	18/10/06		CHECKED BY	X ±0.4
O	05/01/10		RDS	X.X ±0.2
P	06/07/11			X.XX ±0.1
Q	07/11/13			DIMS mm
R	11/09/17	DESCRIPTION		
		P500 RIPS		
		ROTARY SENSOR		
SCALE	10mm	DRAWING NUMBER	P500-11	REV R
				SHEET 1 OF 1

P500 ROTARY SENSOR

High-resolution angle feedback for industrial and scientific applications

- **Non-contacting inductive technology to eliminate wear**
- **Angle set to customer's requirement**
- **Compact, durable and reliable**
- **High accuracy and stability**
- **Sealing to IP65/IP67 as required**



As a leading designer and manufacturer of linear, rotary, tilt and intrinsically safe position sensors, Positek® has the expertise to supply a sensor to suit a wide variety of applications.
Our P500 is an affordable, durable, high-accuracy rotary sensor designed for industrial and scientific feedback applications.
The P500, like all Positek® sensors, is supplied with the output calibrated to the angle required by the customer, between 16 and 160 degrees and with full EMC protection built in. The sensor provides a linear output proportional with input shaft rotation, which has full 360 degree rotational freedom.
There is a machined registration mark to identify the calibrated mid point. Overall performance, repeatability and stability are outstanding over a wide temperature range.
It is particularly suitable for OEMs seeking good sensor performance for arduous applications such as industrial machinery where cost is important.
The P500 has long service life and environmental resistance with a rugged stainless steel body and shaft, the flange and servo mounts are anodised aluminium. The flange or servo mounting options make the sensor easy to install, it also offers a range of mechanical and electrical options.
Environmental sealing is to IP65 or IP67 depending on selected cable or connector options.

SPECIFICATION

Dimensions	
Body diameter	35 mm
Body Length (to seal face)	44 mm standard, 50 mm buffered
Shaft	15 mm Ø 6 mm
For full mechanical details see drawing P500-11	
Independent Linearity	≤ ± 0.25% FSO @ 20°C - up to 100°
Temperature Coefficients	< ± 0.01%/°C Gain &
	< ± 0.01%FS/°C Offset
Frequency response	> 10 kHz (-3dB)
	> 300 Hz (-3dB) 2 wire 4 to 20 mA
Resolution	Infinite
Noise	< 0.02% FSO
Torque	< 20 mNm Static
Environmental Temperature Limits	
Operating	-40°C to +125°C standard
	-20°C to +85°C buffered
Storage	-40°C to +125°C
Sealing	IP65/IP67 depending on connector / cable option
EMC Performance	EN 61000-6-2, EN 61000-6-3
Vibration	IEC 68-2-6: 10 g
Shock	IEC 68-2-29: 40 g
MTBF	350,000 hrs 40°C Gf
Drawing List	
P500-11	Sensor Outline

3D models, step or .igs format, available on request.

Do you need a position sensor made to order to suit a particular installation requirement or specification? We'll be happy to modify any of our designs to suit your needs - please contact us with your requirements.

For further information please contact:
www.positek.com sales@positek.com
Tel: +44(0)1242 820027 fax: +44(0)1242 820615
Positek, Andoversford Industrial Estate, Cheltenham GL54 4LB. U.K.

P500 ROTARY SENSOR

High-resolution angle feedback for industrial and scientific applications

How Positek's technology eliminates wear for longer life

Positek's Inductive technology is a major advance in displacement sensor design. Our displacement transducers have the simplicity of a potentiometer with the life of an LVDT/RVDT.
Our technology combines the best in fundamental inductive principles with advanced micro-electronic integrated circuit technology. A Positek sensor, based on simple inductive coils using Positek's ASIC control technology, directly measures absolute position giving a DC analogue output signal. Because there is no contact between moving electrical components, reliability is high and wear is eliminated for an exceptionally long life.
It also overcomes the drawbacks of LVDT technology – bulky coils, poor length-to-stroke ratio and the need for special magnetic materials, no requirement for separate signal conditioning.
We also offer a range of ATEX-qualified intrinsically-safe sensors.

P500 .	a	b	c	d	e	f	g
	Displacement	Output	Adjustments	Connections	Option	Option	Z-code

a **Displacement**	**Value**
Factory set to any angle from 0-16° (±8°) to 0-160° (±80°) (e.g. 0-54°)	**54**

b **Output**

Supply V_{dc} (tolerance)	**Output**	**Code**
+5V (4.5 - 5.5V)	0.5 - 4.5V (ratiometric with supply)	**A**
±15V nom. (±9 - 28V)	±5V	**B**
+24V nom. (13 - 28V)	0.5 - 9.5V	**C**
±15V nom. (±13.5 - 28V)	±10V	**D**
+24V nom. (18 - 28V)	4 - 20mA 2 wire	**E**
+24V nom. (13 - 28V)	4 - 20mA 3 wire Sink	**F**
+24V nom. (9 - 28V)	0.5 - 4.5V	**G**
+24V nom. (13 - 28V)	4 - 20mA 3 wire Source	**H**

Supply Current: 'A' 10mA nominal, 12mA max. 'B', 'D' & 'G' 12mA nominal, 15mA max. 'E' 26mA max. 'F' & 'H' 32mA nominal, 35mA max.

c **Calibration Adjustments**	**Code**
Accessible default	blank
Sealed	**Y**

d **Connections**	**Code**
Connector IP65 4 pin (3+earth) DIN 43650 'C'	**J**
Connector IP65 4 pin (3+earth) DIN 43650 'C' pre-wired	**Jxx**
Cable gland IP67 M12, nylon	**Lxx**
Cable gland, short† IP67, metal	**Mxx**

Specify required cable length **'xx'** in cm. e.g. L2000 specifies axial cable gland with 20 m of cable, 50 cm supplied as standard. †Nb: restricted cable pull strength.

e **Shaft Option**	**Code**
None default	blank
Sprung to stop up to 100° maximum	**N**

f **Sensor Mounting**	**Code**
Flange default	blank
Servo Mount	**P**

See drawing P500-11 for details.

g **Z-code (optional)**	**Code**
Connector IP67 M12 IEC 61076-2-101 must have options 'Y' & 'J'	**Z600**
Connector IP67 M12 IEC 61076-2-101 must have option 'J'	**Z601**
≤± 0.1% FSO @20°C Independent Linearity 0 - 16° min. to 0 - 100° max.	**Z650**

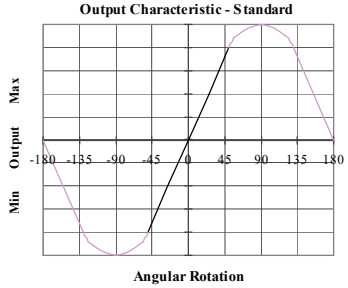

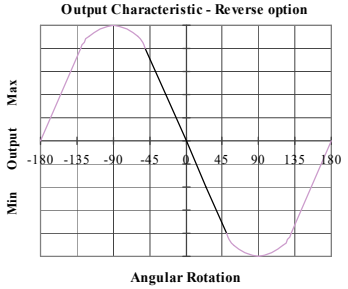

For further information please contact:
www.positek.com sales@positek.com
Tel: +44(0)1242 820027 fax: +44(0)1242 820615
Positek, Andoversford Industrial Estate, Cheltenham GL54 4LB. U.K.

Installation Information
P500 ROTARY SENSOR

Output Option	Output Description:	Supply Voltage: V_s (tolerance)	Load resistance: (include leads for 4 to 20mA O/Ps)
A	0.5 - 4.5V (ratiometric with supply)	+5V (4.5 - 5.5V)	≥ 5kΩ
B	±5V	±15V nom. (±9 - 28V)	≥ 5kΩ
C	0.5 - 9.5V	+24V nom. (13 - 28V)	≥ 5kΩ
D	±10V	±15V nom. (±13.5 - 28V)	≥ 5kΩ
E	4 - 20mA 2 wire Current Loop	+24V nom. (18 - 28V)	≈ 0 - 300Ω max. @24V ~ 1.2 to 6V across 300Ω {R_L max. = (V_s - 18) / 20^{-3}}
F	4 - 20mA 3 wire Sink	+24V nom. (13 - 28V)	≈ 0 - 950Ω max. @24V ~ 3.8 to 19V across 950Ω {R_L max. = (V_s - 5) / 20^{-3}}
G	0.5 - 4.5V	+24V nom. (9 - 28V)	≥ 5kΩ
H	4 - 20mA 3 wire Source	+24V nom. (13 - 28V)	≈ 0 - 300Ω max. ~ 1.2 to 6V across 300Ω

Not all output options available - see product datasheet for full options list

Connector Pinout
(Front View)
DIN 43650 C

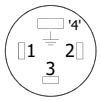

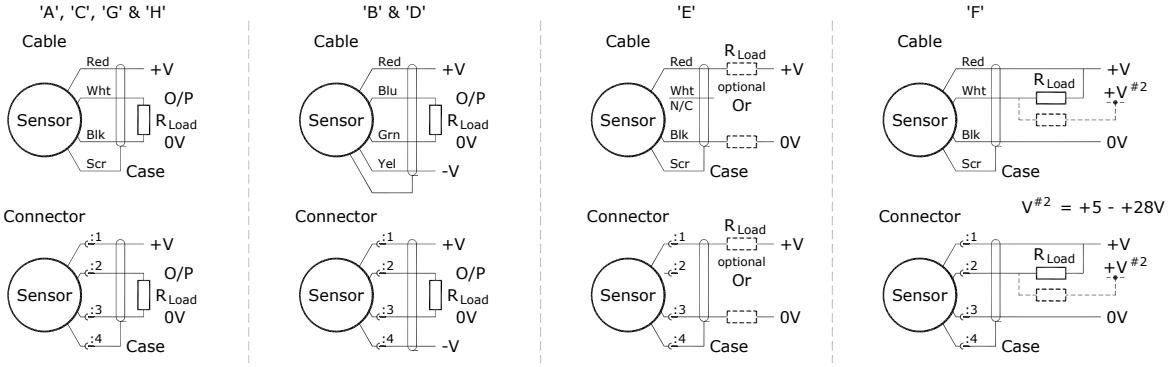

Gain and Offset Adjustment: (Where accessible - Typically ± 10% Min available)
To adjust the gain or offset use a small potentiometer adjuster or screwdriver 2mm across. Do not apply too much force on the potentiometers.

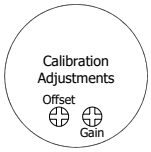

Mechanical Mounting: Flange mounted or servo mount, with appropriate clips - see drawing P500-11. The sensor should be mounted with minimal axial and radial loading on the shaft for optimum life. It is recommended that the shaft is coupled to the drive using a flexible coupling. Tests indicate that life in excess of 16 million cycles can be achieved with 1kg side and end load.

Output Characteristic: The sensor has full rotational freedom and two sectors, 180° apart, over which linear response can be achieved. At the mid point of the calibrated range the output signal will be half full scale deflection, and the flat on the shaft is aligned with the registration mark in the base of the sensor. In the calibrated range the output increases as the shaft is rotated in an anti-clockwise direction viewed from the shaft. The calibrated output is factory set to be between 16 and 160°.

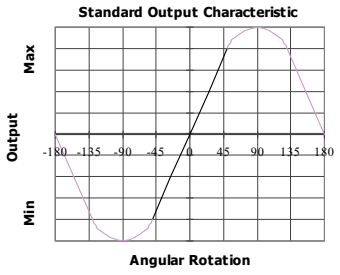

Incorrect Connection Protection levels:-

A **Not protected** – the sensor is **not** protected against either reverse polarity or over-voltage. The risk of damage should be minimal where the supply current is limited to less than 50mA.
B & D Supply leads diode protected. Output must not be taken outside ± 12V.
C & G Supply leads diode protected. Output must not be taken outside 0 to 12V.
E, F & H Protected against any misconnection within the rated voltage.

For further information please contact:
www.positek.com sales@positek.com
Tel: +44(0)1242 820027 fax: +44(0)1242 820615
Positek, Andoversford Industrial Estate, Cheltenham GL54 4LB. U.K.