E43337

Probe for level sensors

LR PROBE L800

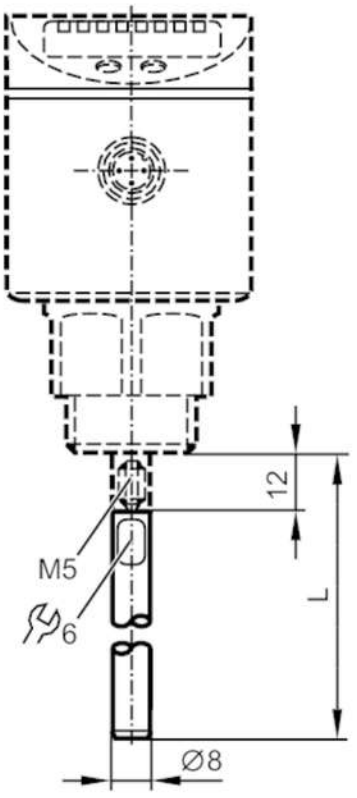

Application		
Design		for level sensors LR
Measuring/setting range		
Probe length L	[mm]	800
Mechanical data		
Weight	[g]	345
Materials		stainless steel (1.4404 / 316L)
Tightening torque	[Nm]	4
Remarks		
Pack quantity		1 pcs.