DF2101

Power supply module for electronic circuit breaker

Fuse/IO-Link/24VDC/Module

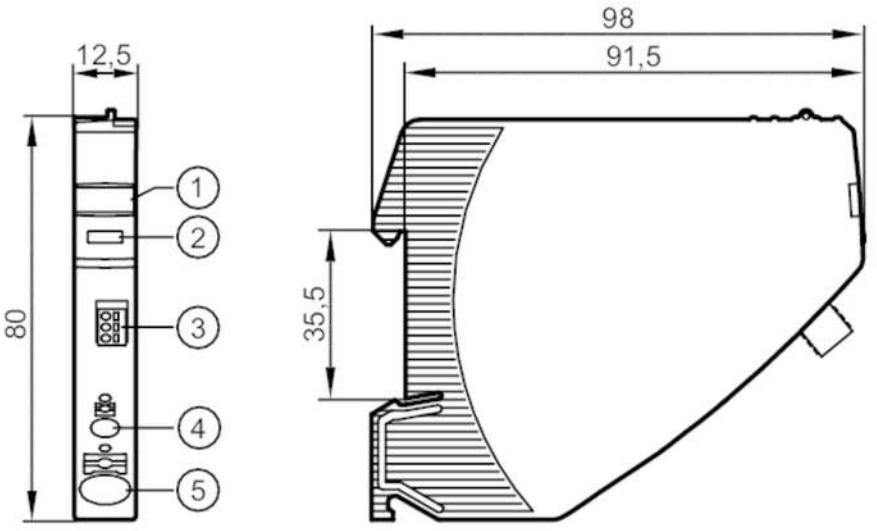

1 panel for labelling
2 status LED
3 push-in terminals IO-Link
4 push-in terminal 0 V
5 push-in terminal 24 V DC

Electrical data		
Operating voltage	[V]	to SELV/PELV
Nominal voltage DC	[V]	24
Input voltage DC	[V]	19.2...30
Protection class		III
Reverse polarity protection		yes
Mains buffering time (nominal voltage 24 V DC)	[ms]	10
Input current (nominal voltage 24 V DC)	[A]	40
Closed-circuit current	[mA]	10
Interfaces		
Communication interface		IO-Link
Transmission type		COM2 (38,4 kBaud)
IO-Link revision		1.1
SIO mode		no
Min. process cycle time	[ms]	20
Supported DeviceIDs		**Type of operation** / **DeviceID**
		default / 892
Note		For further information please see the IODD PDF file under "Downloads"
Operating conditions		
Ambient temperature	[°C]	-25...60
Storage temperature	[°C]	-40...70
Protection		IP 20; (on the front)

DF2101

Power supply module for electronic circuit breaker

Fuse/IO-Link/24VDC/Module

Pollution degree		2	
Tests / approvals			
EMC		EN 61000-6-3	radiation of interference
		EN 61000-6-2	immunity
Mechanical data			
Weight	[g]	73	
Dimensions	[mm]	80 x 12.5 x 98	
Displays / operating elements			
Display		status	1 x LED, red / green / orange
Electrical connection			
push-in terminals:			
contact lever/strip:			

Connection

