SCHAEFFLER

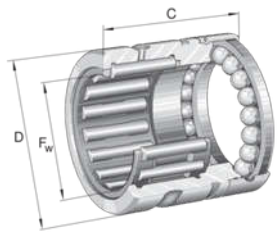

NX10-Z-XL

Needle roller/axial ball bearing

Schaeffler ID:
0507791500000

Needle roller/axial ball bearings NX..-Z, single direction axial component, for grease lubrication

X-life

Technical information

2)

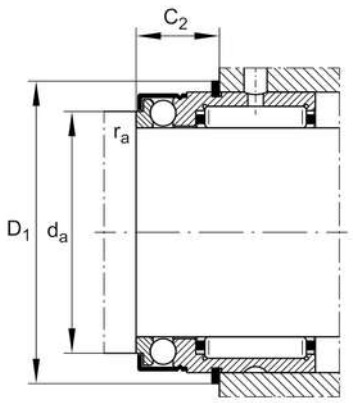

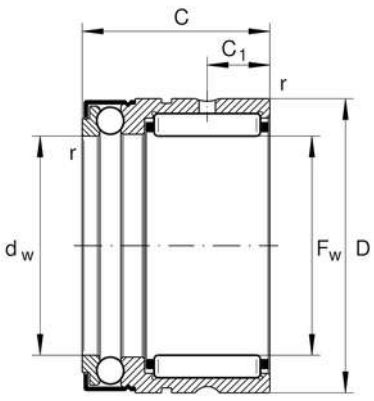

Main Dimensions & Performance Data

F_w	10 mm	Bore diameter
D	19 mm	Outside diameter
C	18 mm	Height
C_r	5,000 N	Basic dynamic load rating, radial
C_{0r}	3,700 N	Basic static load rating, radial
C_a	4,600 N	Basic dynamic load rating, axial
C_{0a}	7,200 N	Basic static load rating, axial
C_{ur}	730 N	Fatigue load limit, radial
C_{ua}	330 N	Fatigue load limit, axial
n_G	11,000 1/min	Limiting speed
	21.3 g	Weight

Mounting dimensions

d_a	14.6 mm	Mounting dimension shaft shoulder
$r_{a\,max}$	0.3 mm	Maximum recess radius
D_1	21.9 mm	Connection diameter snap ring
C_2	10 mm	Connection width with snap ring

Dimensions

C_1	4.7 mm	Distance to lubrication hole
C_2	4.7 mm	Distance to lubrication hole
d_w	10 mm	Bore diameter of shaft washer
r_{min}	0.3 mm	Minimum chamfer dimension

Temperature range

T_{min}	-30 °C	Operating temperature min.
T_{max}	120 °C	Operating temperature max.

The datasheet is only an overview of dimensions and basic load ratings of the selected product. Please always observe all further information and guidelines for this product. For further information you can use the contact form on our website.

Additional information

IR6X10X10-IS1-XL	Suitable inner rings IR
WR19, SW19	Snap ring

The datasheet is only an overview of dimensions and basic load ratings of the selected product. Please always observe all further information and guidelines for this product. For further information you can use the contact form on our website.