BFA15070230

COMPLETE STAR-DELTA STARTER, OPEN FRAME, FOR STARTING TIME UP TO 12 SECONDS AND A MAXIMUM OF 30 OPERATIONS/HOUR, MAX IEC OPERATING CURRENT 225A. COIL VOLTAGE 230VAC 50/60HZ



Product designation			Star-delta starter
Product type designation			BFA150
Electrical features			
Maximum operating current (≤440V)		A	230
Components			
Contactor standard supplied			BF15000A / BF15000A / BF8000A
Thermal relay standard supplied			No
Thermal relay to purchase separately			RF200
Auxiliary contact standard supplied			BFX1020 / BFX1011 / BFX1011
Contact characteristics			
IEC standard motor powers			
	230V	kW	75
	400V	kW	132
	440V	kW	132
	500V	kW	160
Mechanical features			
Weight		g	7500

Dimensions

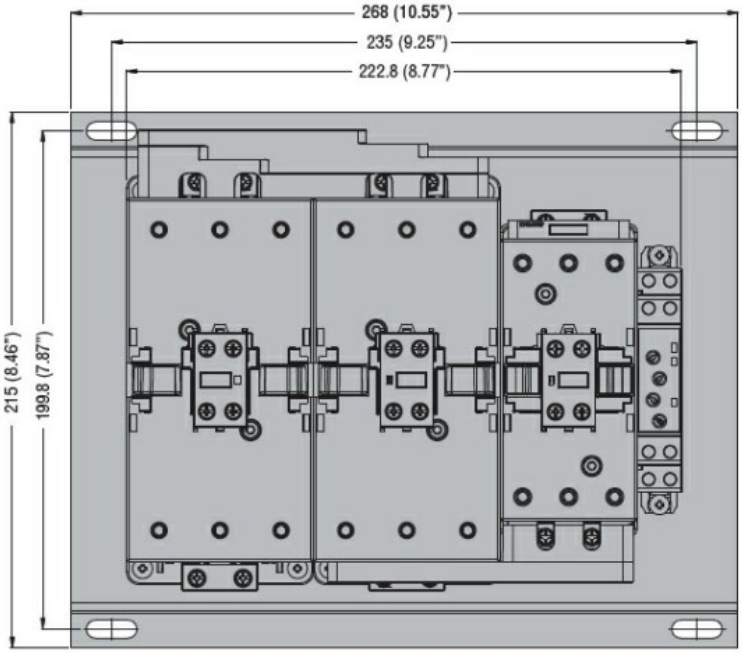

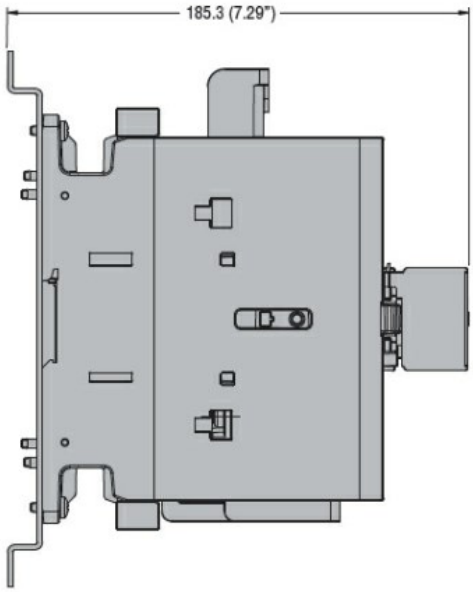

Wiring diagrams

The characteristics described in this document are subject to updates or modifications at any time. The descriptions, technical and functional information, illustrations and instructions in this brochure are purely illustrative, and are consequently not contractually binding

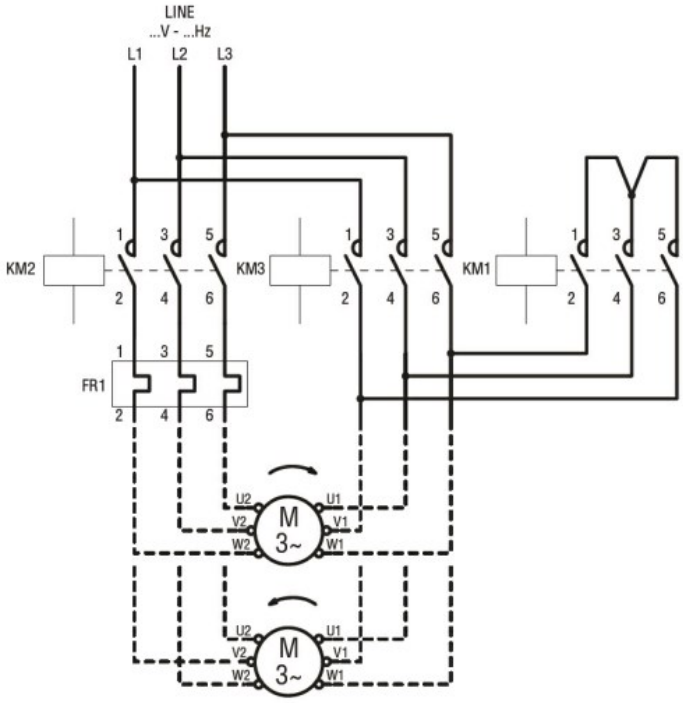

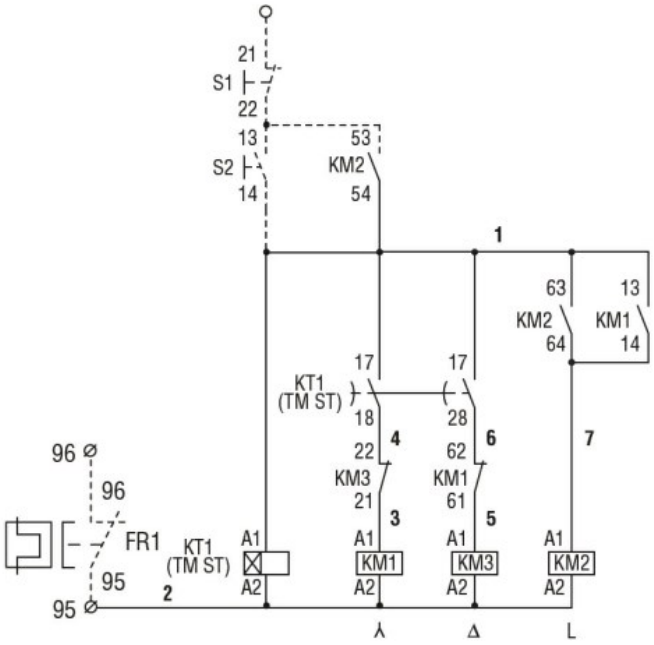

Certifications and compliance

Compliance

	IEC/EN 60947-1
	IEC/EN 60947-4-1

Certificates

/

ETIM classification

ETIM 8.0	EC001037 - Motor starter/Motor starter combination

The characteristics described in this document are subject to updates or modifications at any time. The descriptions, technical and functional information, illustrations and instructions in this brochure are purely illustrative, and are consequently not contractually binding