PRODUCT DATASHEET
DL SLIM DN 210 18 W 3000 K WT

DOWNLIGHT SLIM ROUND | Flat downlights with integrated driver, round shape



Areas of application

- Direct replacement for luminaires with compact fluorescent lamps
- General illumination
- Public areas
- Stairways
- Corridors
- Foyers
- Shops

Product benefits

- Very slim housing
- Low installation depth
- High luminous efficacy
- Energy savings up to 60 % (compared to luminaires that use CFL lamps)
- Very homogenous light
- Functional design
- Easy installation with fast connection
- Simple installation thanks to integrated driver

Product features

- Small visible bezel



© 2024, LEDVANCE GmbH. All rights reserved.

- Connector box with push wire terminal for tool-free connection
- Light guide made of non-yellowing PMMA for long lifetime

© 2024, LEDVANCE GmbH. All rights reserved.

TECHNICAL DATA

Electrical data

Nominal wattage	18.00 W
Nominal voltage	220…240 V
Mains frequency	50…60 Hz
Nominal current	108 mA
Inrush current	17 A
Inrush current time T_{h50}	56 µs
Max. number of luminaires per miniature circuit breaker B16	44
Max. number of luminaires per miniature circuit breaker C10	35
Max. number of luminaires per miniature circuit breaker C16	56
Power factor λ	0.50
Total harmonic distortion	< 20 %
Protection class	II
Operating mode	Integrated LED driver

Photometrical data

Luminous flux	1530 lm
Luminous efficacy	85 lm/W
Color temperature	3000 K
Light color (designation)	Warm White
Color rendering index Ra	> 80
Standard deviation of color matching	< 6 sdcm
Luminous intensity	-
Flickering metric (Pst LM)	-
Stroboscope effect metric (SVM)	-
Photobiological safety group acc. to EN62778	RG0
Photobiological safety group acc. to EN62471	RG0
Beam angle	120 °

© 2024, LEDVANCE GmbH. All rights reserved.

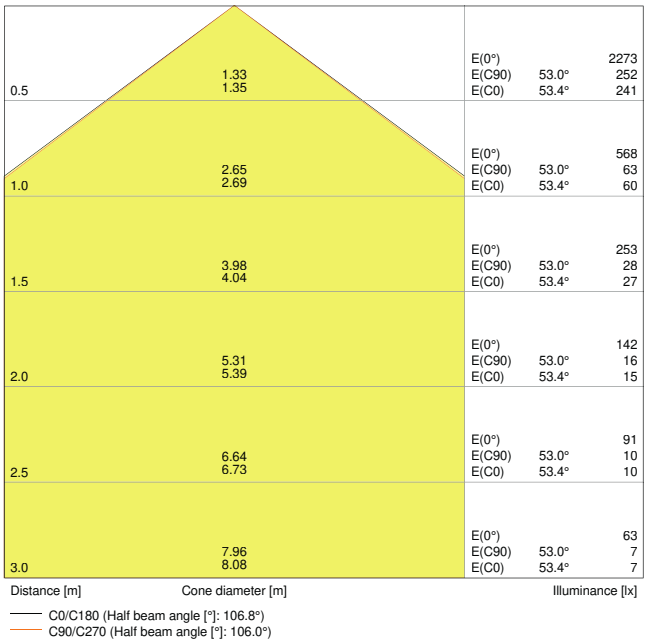

LDC typ cone

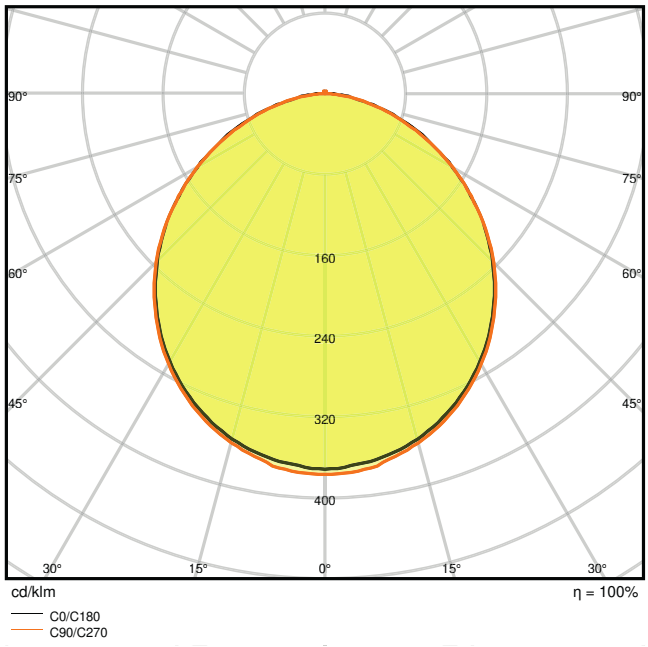

LDC typ polar

Dimensions & Weight

Diameter	225.00 mm
Height	30.00 mm
Product weight	435.00 g

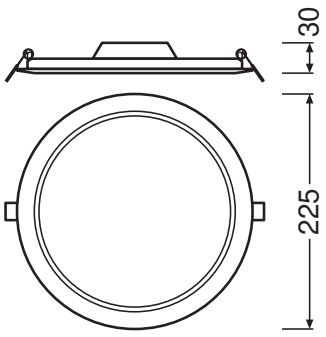

Materials & Colors

© 2024, LEDVANCE GmbH. All rights reserved.

Product color	White
Housing color	White
Body material	Polycarbonate (PC)
Cover material	Polycarbonate (PC)
Light emitting surface material	Polycarbonate (PC)
Glow Wire Test according to IEC 60695-2-12	650 °C
Mercury content	0.0 mg

Application & Mounting

Ambient temperature range	-20…+50 °C
Temperature range at storage	-30…+70 °C
Type of connection	Screwless terminal, 2-Pole
Type of protection	IP20
Protection class IK (shock resistance)	IK03
Dimmable	No
Mounting type	Recessed
Mounting location	Ceiling
Application environment	Indoor
Mounting diameter	210,0 mm
Mounting depth	50,0 mm
LED module replaceable	Not replaceable
With light source	Yes

Lifespan

Lifespan L70/B50 at 25 °C	30000 h [1)]
Lifespan L80/B10 at 25 °C	20000 h [1)]
Lifespan L90/B10 at 25 °C	12000 h
Number of switching cycles	50000

1) t[h]: L70 / B50 @ 25 °C (Ta), t[h]: L80 / B10 @ 25 °C (Ta), t[h]: L90 / B10 @ 25 °C (Ta)

Control gear

Output current	295 mA
ECG - Output ripple current	< 6.5 %

Certificates & Standards

Standards	CE / CB / EAC

© 2024, LEDVANCE GmbH. All rights reserved.

Luminaire with limited surface temperature, "D sign"	No
Ball shot safe	No

Additional product data

Number of illuminants	Not relevant

EQUIPMENT / ACCESSORIES

- Surface mounting frames available as accessories

DOWNLOAD DATA

	Documents and certificates
PDF	Addon Technical Information
PDF	Installation guide
PDF	On-Pack-Info
PDF	Declarations Of Conformity CE
PDF	Declarations Of Conformity UKCA

	Photometric and lighting design files
IES	IES file (IES)
LDT	LDT file (Eulumdat)
ULD	ULD file (DIALux)
ROLF	ROLF file (RELUX)
	UGR file (UGR table)
	LDC typ cone
	LDC typ polar

© 2024, LEDVANCE GmbH. All rights reserved.

	CAD/BIM files
	BIM_Revit_3D
	CAD_STEP_3D

	Tender texts
	Tender documents

LOGISTICAL DATA

Product code	Packaging unit (Pieces/Unit)	Dimensions (length x width x height)	Gross weight	Volume
4058075079090	Folding box 1	45 mm x 250 mm x 230 mm	518.00 g	2.59 dm³
4058075079106	Shipping box 6	290 mm x 260 mm x 250 mm	3439.00 g	18.85 dm³

The mentioned product code describes the smallest quantity unit which can be ordered. One shipping unit can contain one or more single products. When placing an order, for the quantity please enter single or multiples of a shipping unit.

ADDITIONAL CATALOG INFORMATION

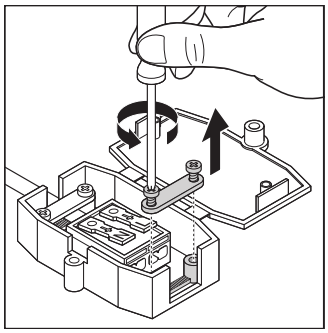

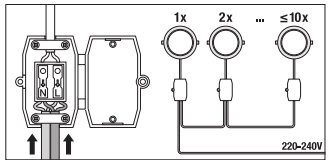

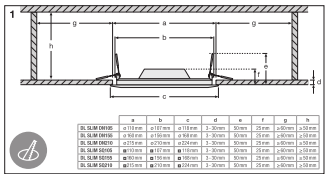

References / Links

- For Guarantee see www.ledvance.com/guarantee

DISCLAIMER

Subject to change without notice. Errors and omission excepted. Always make sure to use the most recent release.

© 2024, LEDVANCE GmbH. All rights reserved.