

Image may differ from product. See technical specification for details.

23028-2CS5/VT143

Spherical roller bearing with integral sealing and relubrication features

Spherical roller bearings can accommodate heavy loads in both directions. They are self-aligning and accommodate misalignment and shaft deflections, with virtually no increase in friction or temperature. Under normal operating conditions, sealed bearings are almost

maintenance-free, keeping service costs and grease consumption low. The design includes features to facilitate relubrication.

- Accommodate misalignment
- High load carrying capacity
- Sealed for increased reliability, with relubrication features
- Low friction and long service life
- Increased wear resistance

Overview

Dimensions

Bore diameter	140 mm
Outside diameter	210 mm
Width	53 mm

Performance

Basic dynamic load rating	485 kN
Basic static load rating	680 kN
Limiting speed	700 r/min
SKF performance class	SKF Explorer

Properties

Number of rows	2
Locating feature, bearing outer ring	Without
Bore type	Cylindrical
Cage	Sheet metal
Radial internal clearance	CN
Tolerance class for dimensions	Normal
Tolerance class for run-out	P5
Sealing	Seal on both sides
Sealing type	Contact
Lubricant	Grease
Relubrication feature	With
Candidate for remanufacturing	Yes

Logistics

Product net weight	6.21 kg
eClass code	23-05-09-11
UNSPSC code	31171510

Technical specification

Bore type	Cylindrical

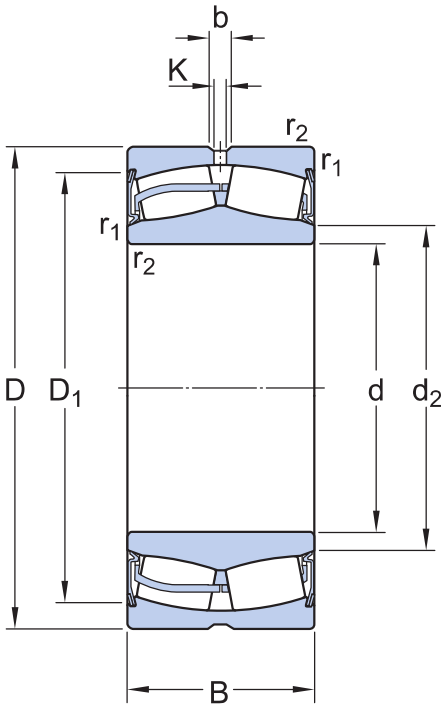

Dimensions

d	140 mm	Bore diameter
D	210 mm	Outside diameter
B	53 mm	Width
d_2	≈ 155 mm	Shoulder diameter of inner ring
D_1	≈ 197 mm	Shoulder/recess diameter of outer ring
b	8.3 mm	Width of lubrication groove
K	4.5 mm	Diameter of lubrication hole
$r_{1,2}$	min. 2 mm	Chamfer dimension

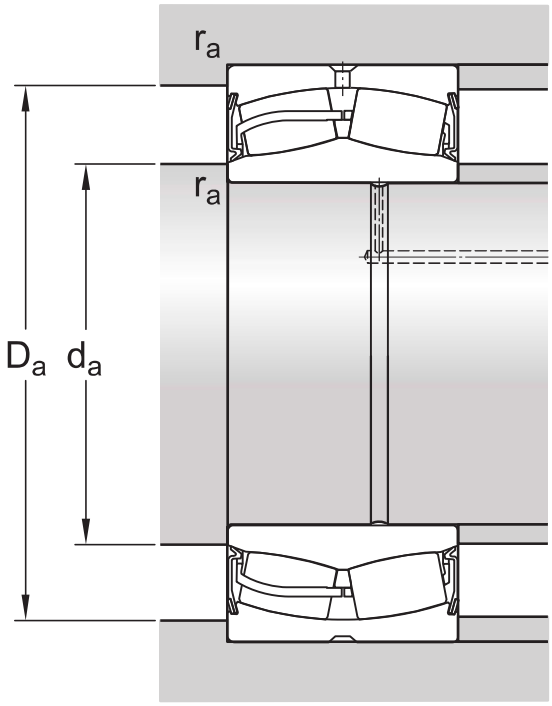

Abutment dimensions

d_a	min. 149 mm	Diameter of shaft abutment
d_a	max. 155 mm	Diameter of shaft abutment
D_a	max. 201 mm	Diameter of housing abutment
r_a	max. 2 mm	Radius of fillet

Calculation data

SKF performance class		SKF Explorer
Basic dynamic load rating	C	485 kN
Basic static load rating	C_0	680 kN
Fatigue load limit	P_u	68 kN
Limiting speed		700 r/min
Limiting value	e	0.2
Calculation factor	Y_1	3.4
Calculation factor	Y_2	5
Calculation factor	Y_0	3.2

Tolerance class

Dimensional tolerances	Normal
Radial run-out	P5

Tolerances and clearances

GENERAL BEARING SPECIFICATIONS

- Tolerances: Normal, P6, P5,
  tapered bore 1:12, tapered bore 1:30
- Radial internal clearance: cylindrical bore, tapered bore

BEARING INTERFACES

- Seat tolerances for standard conditions
- Tolerances and resultant fit

More Information

Product details

- Designs and variants
- General bearing specifications
- Loads
- Temperature limits
- Permissible speed
- Design considerations
- Mounting
- Designation system

Engineering information

- Principles of rolling bearing selection
- General bearing knowledge
- Bearing selection process
- Bearing failure and how to prevent it

Tools

- SimPro Quick
- SKF Product select - Select and evaluate bearing
- SKF Product select - Combine housing with bearing
- LubeSelect for SKF greases
- Drive-up Method Program
- Heater selection tool
- Oil Injection Method Program
- Tool and Accessory Selector for sleeves and shafts

Terms of use

By accessing and using this website / app owned and published by AB SKF (publ.) (556007-3495 · Gothenburg) (“SKF”), you agree to the following terms and conditions:

Warranty Disclaimer and Limitation of Liability
Although every care has been taken to assure the accuracy of the information on this website / app, SKF provides this information "AS IS" and DISCLAIMS ALL WARRANTIES, EXPRESS OR IMPLIED, INCLUDING, BUT NOT LIMITED TO, IMPLIED WARRANTIES OF MERCHANTABILITY AND FITNESS FOR A PARTICULAR PURPOSE. You acknowledge that your use of this website / app is at your sole risk, that you assume full responsibility for all costs associated with use of this website / app, and that SKF shall not be liable for any direct, incidental, consequential, or indirect damages of any kind arising out of your access to, or use of the information or software made available on this website / app.

Any warranties and representations in this website / app for SKF products or services that you purchase or use will be subject to the agreed upon terms and conditions in the contract for such product or service.

Further, for non-SKF websites / apps that are referenced in our website / app or where a hyperlink appears, SKF makes no warranties concerning the accuracy or reliability of the information in these websites / apps and assumes no responsibility for material created or published by third parties contained therein. In addition, SKF does not warrant that this website / app or these other linked websites / apps are free from viruses or other harmful elements.

Third Party Services
When viewing YouTube content via the SKF website(s) (i.e. using YouTube API Services), you agree to be bound by the YouTube Terms of Service.

Copyright
Copyright in this website / app copyright of the information and software made available on this website / app rest with SKF or its licensors. All rights are reserved. All licensed material will reference the licensor that has granted SKF the right to use the material. The information and software made available on this website / app may not be reproduced, duplicated, copied, transferred, distributed, stored, modified, downloaded or otherwise exploited for any commercial use without the prior written approval of SKF. However, it may be reproduced, stored and downloaded for use by individuals without prior written approval of SKF. Under no circumstances may this information or software be supplied to third parties.

This website /app includes certain images used under license from Shutterstock, Inc.

Trademarks and Patents
All trademarks, brand names, and corporate logos displayed on the website / app are the property of SKF or its licensors, and may not be used in any way without prior written approval by SKF. All licensed trademarks published on this website / app reference the licensor that has granted SKF the right to use the trademark. Access to this website / app does not grant to the user any license under any patents owned by or licensed to SKF.

Changes
SKF reserves the right to make changes or additions to this website / app at any time.