BCC M425-0000-1A-003-VX8434-050
Ordering code: BCC036P

Connector
M12x1

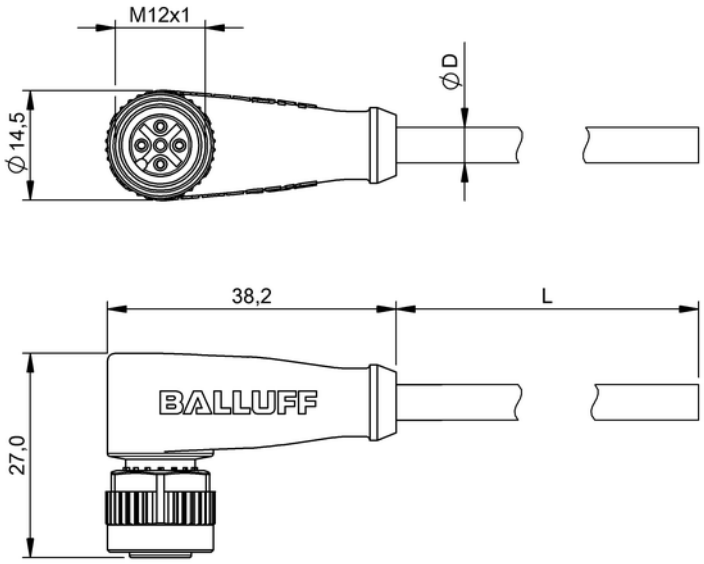

Characteristic data

Number of conductors	4
System	molded
Special properties	Drag chain compatible
Trade name	Global
Power indicator	No
Function indicator (PIN 2)	No
Function indicator (PIN 4)	No
Cable jacket colour	gray
Switching output	No
Switching function	Complementary (NO/NC)

Electrical data

Operating voltage UB max. AC	250 V
Operating voltage UB max. DC	250 V

Mechanical data

Number of sockets or pins	5
Cable length	5 m
Conductor cross-section	0.34 mm²
Cable diameter D	4.8 +/- 0.15 mm
Drag chain compatible	
Acceleration max. (drag chain)	5 m/s²
Bending radius fixed cable	min. 5 x D
Bending radius repeated	min. 10 x D
Bending cycles (in million)	> 2 Mio.
Permiss. horizon. traverse dist.	at 5 m/sec² 5 m
Traverse speed max (drag chain)	at 5 m horiz. travel 200 m/min
Permiss. vert. traverse dist.	at 5 m/sec² 2 m
Ambient temperature (fixed)	-25...105 °C
Ambient temperature (movable)	-5...105 °C
Ambient temperature (dragchain)	-5...60 °C
Grip material	PUR
Cover nut material	GD-Zn
Cable jacket material	PVC
Contact carrier material	PUR
Contact material	CuZn
Tightening torque pigtail	0.6 Nm

Basic data

Enclosure Type per IEC 60529	IP68
Approvals	cULus LISTED

Remarks

Enclosure type accord. to IEC 60529, when threaded together with the appropriate counterpart.
Cable structure according to UL-AWM Style 2517

c UL us LISTED 4MT5 (CYJV CABLE ASSEMBLY)

BCC M425-0000-1A-003-VX8434-050
Ordering code: BCC036P

Connector
M12x1

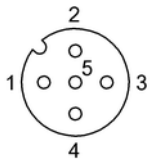

PIN 1: brown, PIN 2: white, PIN 3: blue, PIN 4: black

