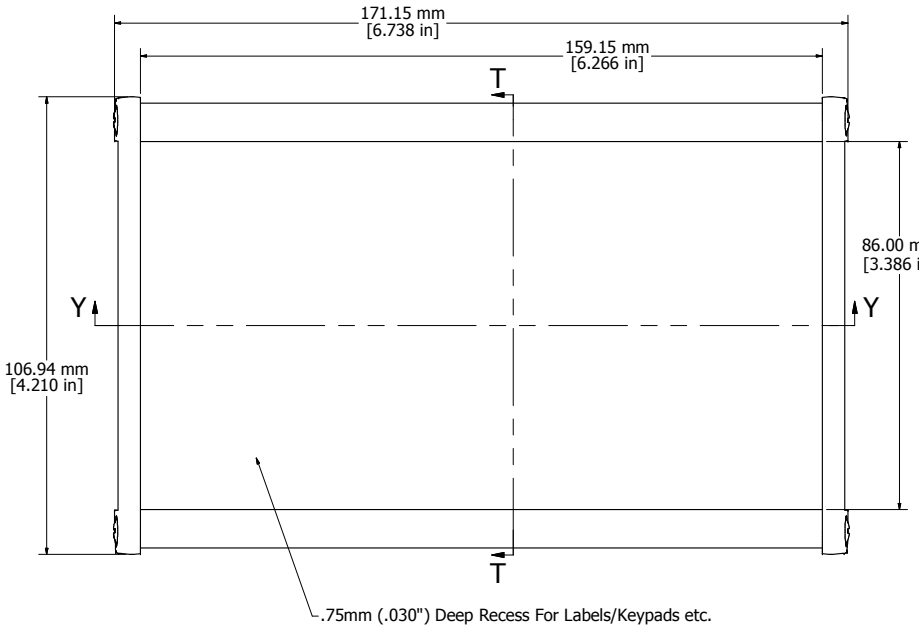

ASSEMBLY - VIEW FROM TOP

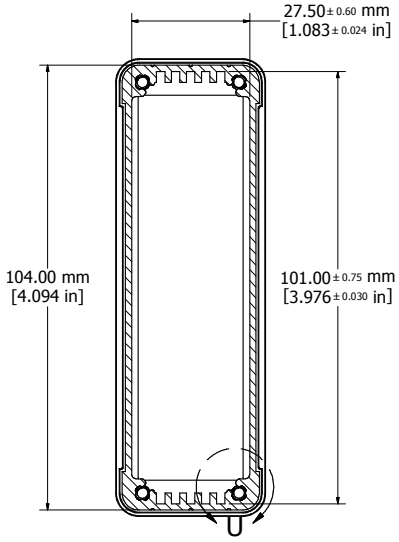

SECTION T-T

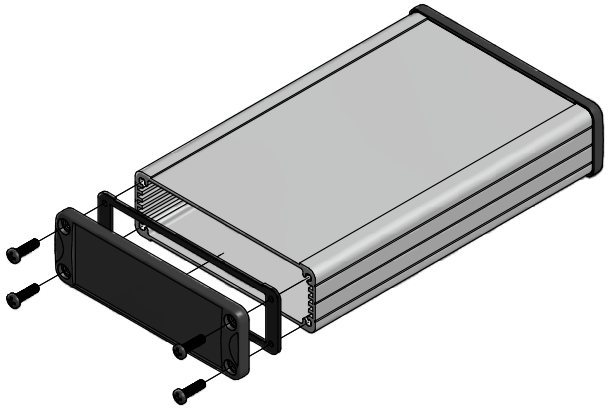

PROTECTION TO IP 65

Enclosures can be Factory Modified (Milling, Drilling, Printing etc.)
Contact Factory mjm@hammondmfg.com for quotes
Solid models of this enclosure available in STEP or IGES.

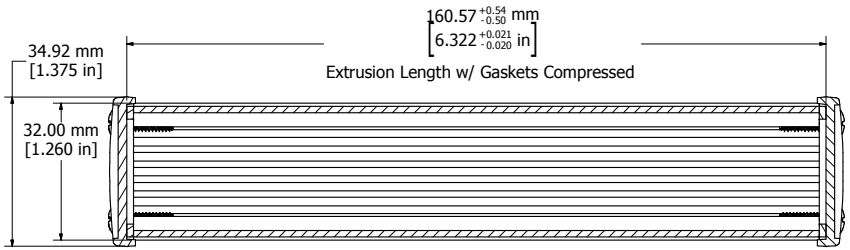

SECTION Y-Y

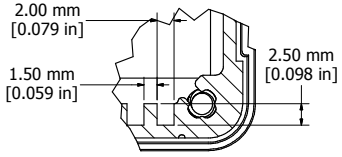

DETAIL U

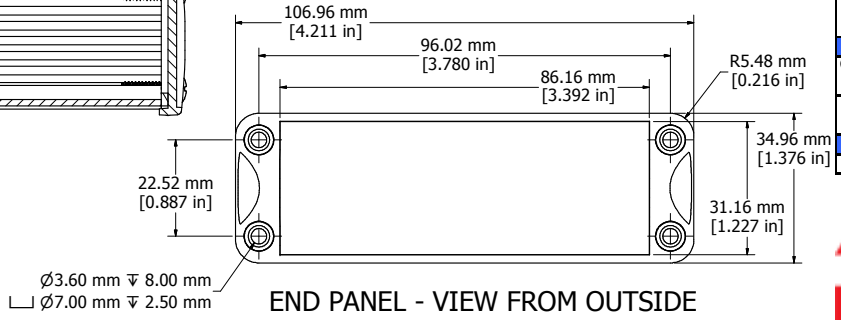

END PANEL - VIEW FROM OUTSIDE

Fits 160mm (6.299") X 100mm (3.937") PCB

NOTE	
Purchased assembly includes box, end panels, #6 Taptight screws w/ O-Rings, self adhesive rubber feet, and gaskets.	
Box made from Extruded Aluminum 6063.	
End panels made from ADC-12 Diecast Aluminum with a black powder paint finish.	
WATERPROOF 1457L1601	
PART NUMBERS	
Clear anodized box with black powder painted end panels	1457L1601
Black powder painted box and end panels	1457L1601BK
EMI/RFI SHIELDED (IP 54)	
Clear anodized box with black powder painted end panels	1457L1601E
Black powder painted box and end panels	1457L1601EBK
ACCESSORIES	
See website for accessories.	

HAMMOND MANUFACTURING™

1457L1601

www.hammondmfg.com