DATASHEET - Q25LT-RT



Illuminated pushbutton actuator, red, momentary

Part no.	**Q25LT-RT**
Catalog No.	**086238**
Alternate Catalog No.	**Q25LT-RT**

Delivery program

Product range			RMQ16
Basic function			Illuminated pushbutton actuators
Mounting hole diameter	∅	mm	16
Single unit/Complete unit			Single unit
Design			Flat
			momentary
Description			without light elements With base, W2x4,6d; max. 30 V, 1 W
Colour			
Lens			
Button plate			
button plate			red
Button plate			
			Blank
Degree of Protection			IP65
Connection to SmartWire-DT			no
Front dimensions			25 x 25

Technical data

General

Standards			IEC/EN 60947
Lifespan, mechanical	Operations	x 10^6	> 3
Operating frequency	Operations/h		≦ 3600
Actuating force		n	≦ 4
Degree of protection, IEC/EN 60529			IP65
Climatic proofing			Damp heat, constant, to IEC 60068-2-78 Damp heat, cyclic, to IEC 60068-2-30
Ambient temperature			
Open		°C	-25 - +60
Enclosed		°C	- 25 - 40
Mounting position			As required
Mechanical shock resistance		g	> 40 according to IEC 60068-2-27 Shock duration 11 ms Sinusoidal
Blade terminal			2.8 x 0.8 mm to DIN 46244
Fast-on connectors			2.8 x 0.8 mm to DIN 46247 and IEC 60760

Contacts

Rated impulse withstand voltage	U_{imp}	V AC	800

Rated insulation voltage	U_i	V	250
Overvoltage category/pollution degree			III/3
Rated operational voltage	U_e	V AC	24
Control circuit reliability			
at 24 V DC/5 mA	H_F	Fault probability	$< 10^{-7}$ (i.e. 1 failure to 10^7 operations)
at 5 V DC/1 mA	H_F	Fault probability	$< 5 \times 10^{-6}$ (1 failure in 5×10^6 operations)
Use of insulated ferrule ISH 2,8			>24 V AC/DC recommended >50 V AC or 120 V DC is mandatory, even on unused blade terminals

Design verification as per IEC/EN 61439

Technical data for design verification			
Rated operational current for specified heat dissipation	I_n	A	0
Heat dissipation per pole, current-dependent	P_{vid}	W	0
Equipment heat dissipation, current-dependent	P_{vid}	W	0
Static heat dissipation, non-current-dependent	P_{vs}	W	0
Heat dissipation capacity	P_{diss}	W	0
Operating ambient temperature min.		°C	-25
Operating ambient temperature max.		°C	60
IEC/EN 61439 design verification			
10.2 Strength of materials and parts			
10.2.2 Corrosion resistance			Meets the product standard's requirements.
10.2.3.1 Verification of thermal stability of enclosures			Meets the product standard's requirements.
10.2.3.2 Verification of resistance of insulating materials to normal heat			Meets the product standard's requirements.
10.2.3.3 Verification of resistance of insulating materials to abnormal heat and fire due to internal electric effects			Meets the product standard's requirements.
10.2.4 Resistance to ultra-violet (UV) radiation			Please enquire
10.2.5 Lifting			Does not apply, since the entire switchgear needs to be evaluated.
10.2.6 Mechanical impact			Does not apply, since the entire switchgear needs to be evaluated.
10.2.7 Inscriptions			Meets the product standard's requirements.
10.3 Degree of protection of ASSEMBLIES			Does not apply, since the entire switchgear needs to be evaluated.
10.4 Clearances and creepage distances			Meets the product standard's requirements.
10.5 Protection against electric shock			Does not apply, since the entire switchgear needs to be evaluated.
10.6 Incorporation of switching devices and components			Does not apply, since the entire switchgear needs to be evaluated.
10.7 Internal electrical circuits and connections			Is the panel builder's responsibility.
10.8 Connections for external conductors			Is the panel builder's responsibility.
10.9 Insulation properties			
10.9.2 Power-frequency electric strength			Is the panel builder's responsibility.
10.9.3 Impulse withstand voltage			Is the panel builder's responsibility.
10.9.4 Testing of enclosures made of insulating material			Is the panel builder's responsibility.
10.10 Temperature rise			Not applicable.
10.11 Short-circuit rating			Is the panel builder's responsibility. The specifications for the switchgear must be observed.
10.12 Electromagnetic compatibility			Is the panel builder's responsibility. The specifications for the switchgear must be observed.
10.13 Mechanical function			The device meets the requirements, provided the information in the instruction leaflet (IL) is observed.

Technical data ETIM 7.0

Low-voltage industrial components (EG000017) / Front element for push button (EC000221)			
Electric engineering, automation, process control engineering / Low-voltage switch technology / Command and alarm device / Front element for push-button actuators (ecl@ss10.0.1-27-37-12-10 [AKF028014])			
Colour button			Red
Number of command positions			1
Construction type lens			Square
Hole diameter		mm	16
Width opening		mm	0

Height opening		mm	0
Type of button			Flat
Suitable for illumination			Yes
With protective cover			No
Labelled			No
Switching function latching			No
Spring-return			Yes
With front ring			Yes
Material front ring			Plastic
Colour front ring			Black
Degree of protection (IP), front side			IP65
Degree of protection (NEMA), front side			1

Approvals

Product Standards			IEC/EN 60947-5; UL 508; CSA-C22.2 No. 14-05; CE marking
UL File No.			E29184
UL Category Control No.			NKCR
CSA File No.			46552
CSA Class No.			3211-03
North America Certification			UL listed, CSA certified
Degree of Protection			UL/CSA Type 1

Dimensions

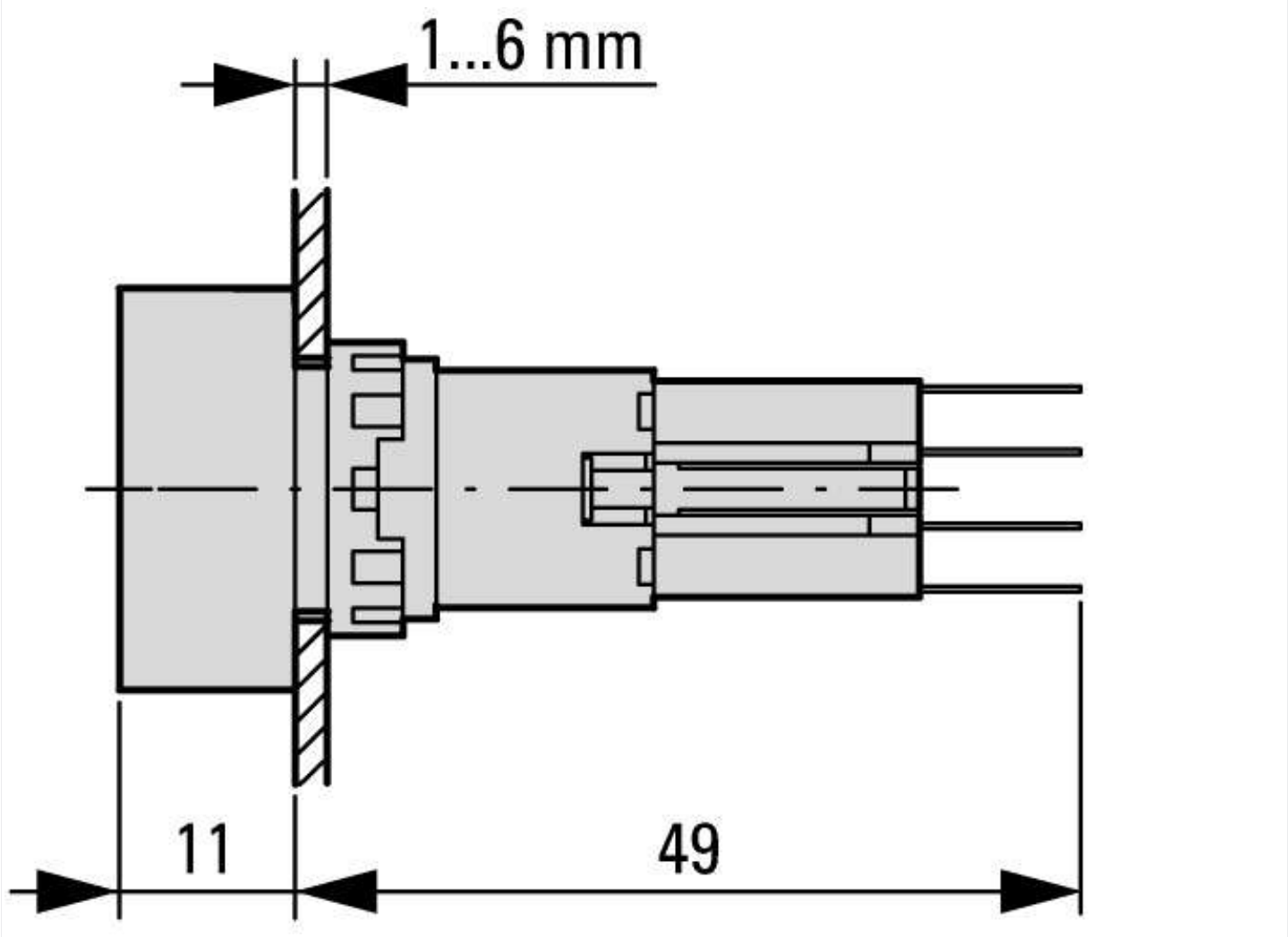

Actuating and indicator elements
Square style

© 09/2020 by Eaton Industries GmbH