LMC500

Sensor for point level detection

LMFCE-N12E-QSKG-0/US

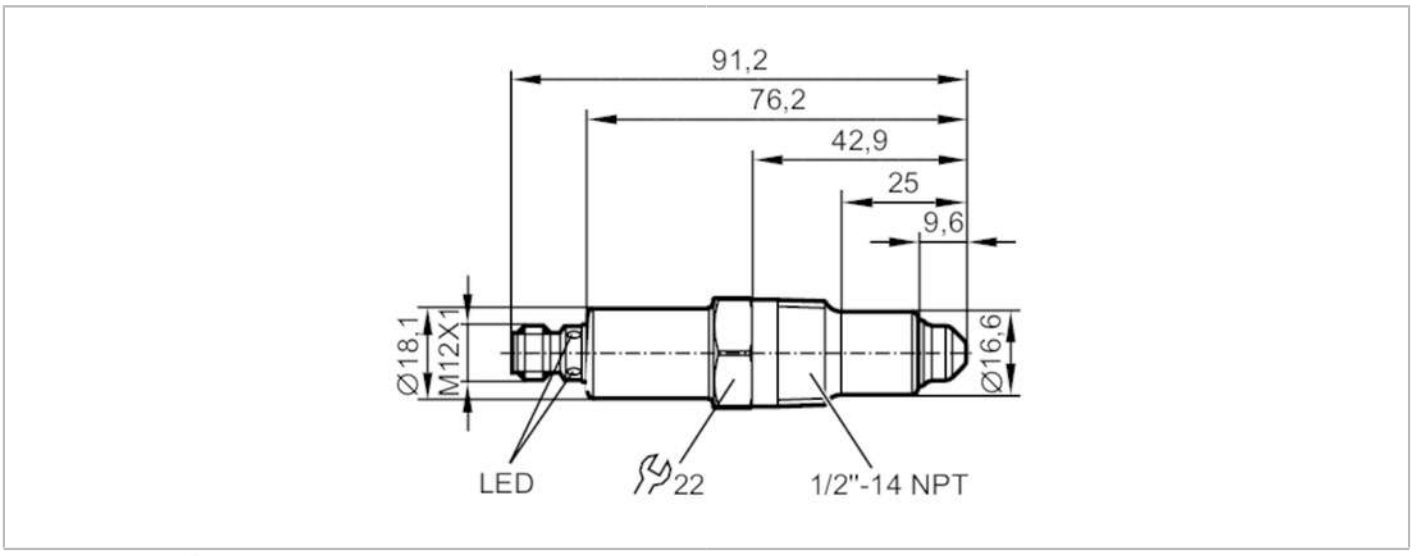

Product characteristics			
Number of inputs and outputs		Number of digital outputs: 2	
Factory setting		water; hydrous media	
Process connection		1/2" NPT	
Application			
Special feature		Gold-plated contacts	
Media		water; hydrous media; oils; oil-based media; coolants; powder	
Cannot be used for		See the operating instructions, chapter "Function and features".	
Medium temperature	[°C]	-25...100	
Probe length	[mm]	25	
Tank pressure		-1...40 bar	-0.1...4 MPa
MAWP (for applications according to CRN)	[bar]	40	
Oil			
Medium temperature	[°C]	-25...100	
Electrical data			
Operating voltage	[V]	18...30 DC	
Current consumption	[mA]	< 35	
Protection class		III	
Reverse polarity protection		yes	
Inputs / outputs			
Number of inputs and outputs		Number of digital outputs: 2	
Outputs			
Total number of outputs		2	
Output signal		switching signal; IO-Link	
Electrical design		PNP/NPN	
Number of digital outputs		2	
Output function		normally open / normally closed; (parameterisable)	

LMC500

Sensor for point level detection

LMFCE-N12E-QSKG-0/US

Max. voltage drop switching output DC	[V]	2.5	
Permanent current rating of switching output DC	[mA]	50; (100 (...60 °C))	
Short-circuit protection		yes	
Type of short-circuit protection		thermal, pulsed	
Overload protection		yes	
Measuring/setting range			
Factory setting		water; hydrous media	
Response times			
Response time	[s]	< 0.5	
Interfaces			
Communication interface		IO-Link	
Transmission type		COM2 (38,4 kBaud)	
IO-Link revision		1.1	
SDCI standard		IEC 61131-9	
Profiles		Smart Sensor: Process Data Variable; Device Identification, Device Diagnosis	
SIO mode		yes	
Required master port type		A	
Process data analogue		1	
Process data binary		2	
Min. process cycle time	[ms]	2.3	
Supported DeviceIDs		**Type of operation**	**DeviceID**
		default	674
Operating conditions			
Ambient temperature	[°C]	-25...85	
Storage temperature	[°C]	-40...85	
Protection		IP 68; IP 69K; (7 days / 1 m water depth / 0.1 bar: IP 68)	
Tests / approvals			
EMC		DIN EN 61000-6-2	
		DIN EN 61000-6-3	: closed tanks
		DIN EN 61000-6-4	: open tanks
Shock resistance		DIN EN 60068-2-27	50 g (11 ms)
Vibration resistance		DIN EN 60068-2-6	20 g (10...2000 Hz)
MTTF	[years]	534	
UL approval		UL Approval no.	H005
Mechanical data			
Weight	[g]	116	
Dimensions	[mm]	Ø 18.11 / L = 76.2	
Materials		stainless steel (316L/1.4404); PEEK; PEI; FKM	
Materials (wetted parts)		stainless steel (316L/1.4404); PEEK; FKM	
Process connection		1/2" NPT	

LMC500

Sensor for point level detection

LMFCE-N12E-QSKG-0/US

Displays / operating elements		
Display	switching status	LED, yellow
	operating status	LED, green

Remarks	
Pack quantity	1 pcs.

Electrical connection

Connector: 1 x M12; coding: A; Contacts: gold-plated



Connection

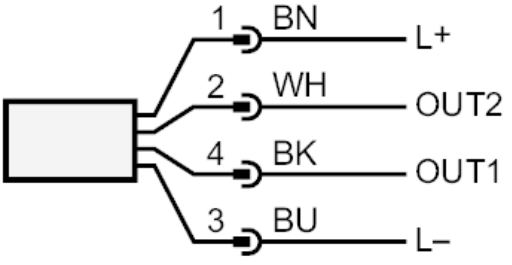

OUT1:	switching output IO-Link
OUT2:	switching output
	colours to DIN EN 60947-5-2
	Core colours :
BK =	black
BN =	brown
BU =	blue
WH =	white