

Image may differ from product. See technical specification for details.

FY 506 M

Square flanged housing for insert bearings, cast iron

These square flanged housings for insert bearings are made of grey cast iron and can be bolted with four bolts to a machine wall or frame. They have been developed for bearing arrangements that must operate reliably in difficult environments.

- Resist high levels of contamination
- Accommodate relatively heavy loads

Overview

Dimensions

Spherical seating diameter	62 mm
Housing overall width	32.5 mm
Centre distance between bolt holes	82.5 mm

Properties

Housing type	Flanged
Flanged housing type	Square
Number of bolt holes for fasteners	4
Fastening bolt hole type	Plain
Material, housing	Cast iron
Coating	Without
Relubrication hole	With
Grease fitting	With

Logistics

Product net weight	0.717 kg
eClass code	23-05-08-02
UNSPSC code	31171536

Technical specification

Material	Cast iron

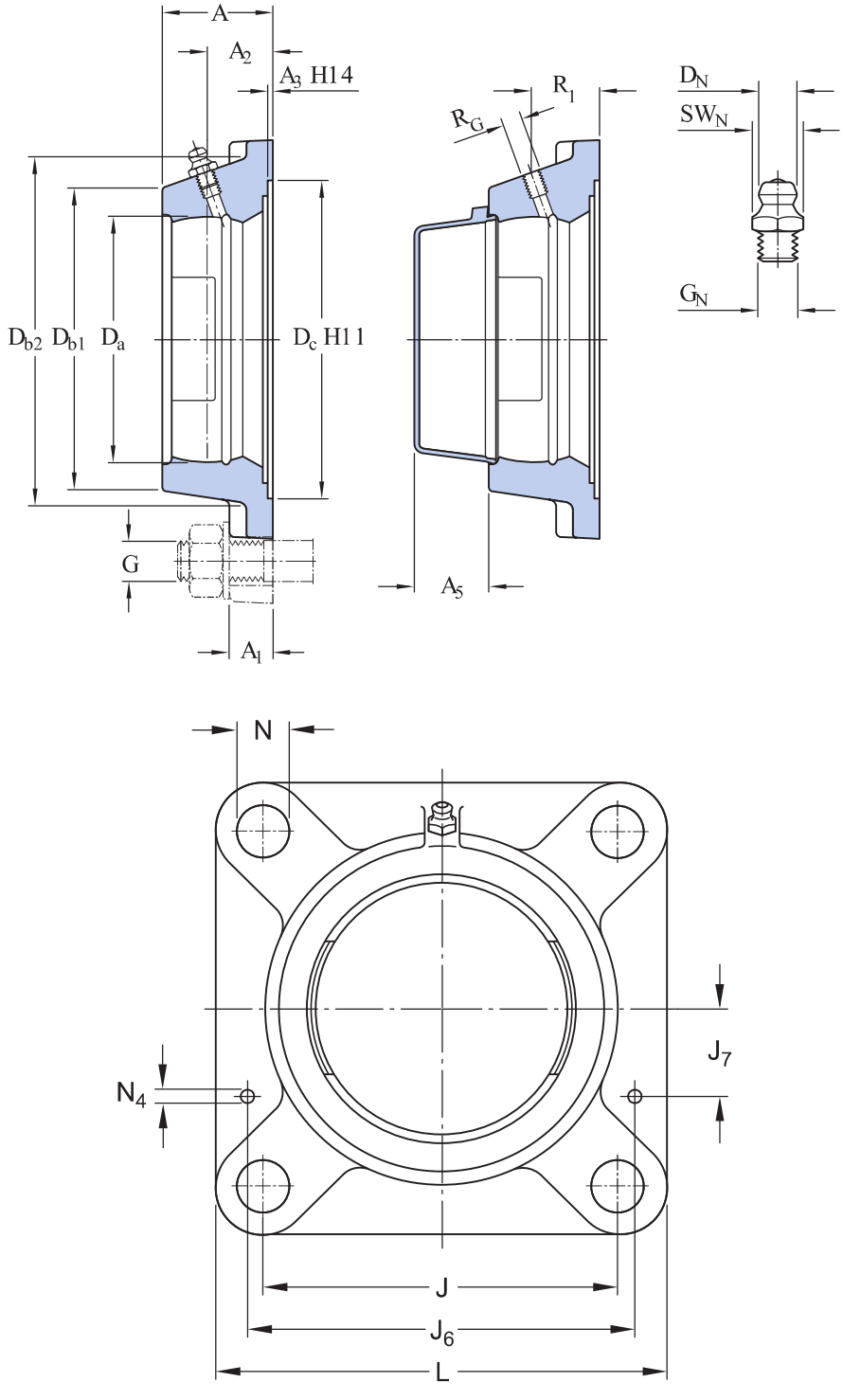

Dimensions

D_a	62 mm	Diameter of spherical seat
D_{b1}	76 mm	Top external diameter
D_{b2}	84 mm	Base external diameter
D_c	93.7 mm	Centring diameter
A	32.5 mm	Overall width
A_1	13 mm	Flange width
A_2	20 mm	Axial position of spherical seat (from support surface)
A_3	3.2 mm	Depth of centring recess
A_5	22.5 mm	Standout of end cover
J	82.5 mm	Centre distance between bolt holes
L	108 mm	Overall length
N	11.5 mm	Diameter of attachment bolt hole

THREADED HOLE

R_G	1/4-28 UNF	Housing thread for grease fitting
R_1	21 mm	Axial position of the housing thread

GREASE FITTING

D_N	6.5 mm	Diameter of head sphere of grease fitting
SW_N	7 mm	Hexagonal key size for the grease fitting
G_N	1/4-28 SAE-LT	Thread of the grease fitting

DOWEL PINS

J_6	96 mm	Distance of dowel pins
J_7	24.5 mm	Axial offset of dowel pins
N_4	4 mm	Recommended diameter for dowel pins

Mounting information

Recommended diameter for attachment bolts, mm	G	10 mm
Recommended diameter for attachment bolts, inch	G	0.375 in

Associated products

End cover	ECY 206

Tolerances and clearances

The values depend on the included bearing:

- Bore diameter tolerance → table 1
- Radial internal clearance → table 2
- Recommended fit → table 3
- Shaft tolerance → table 4

Compatible products

Recommended product

End cover for bearing units	ECY 206

More Information

Product details

- Flanged units to ISO standards
- Flanged units to North American standards
- Flanged units to Japanese Industrial Standards (JIS)
- Flanged units, not standardized (SKF Food Line)
- Permissible misalignment
- Locating/non-locating support
- Loads
- Temperature limits
- Permissible speed
- Lubrication
- Mounting and dismounting
- Ordering information
- Designation system

Engineering information

- Principles of ball bearing units selection and application - Download catalogue (4.9 MB)
- Principles of selecting mounted bearing solutions
- Bearing failure and how to prevent it

Tools

- SKF Product select
- Bearing Frequency Calculator

Terms of use

By accessing and using this website / app owned and published by AB SKF (publ.) (556007-3495 · Gothenburg) (“SKF”), you agree to the following terms and conditions:

Warranty Disclaimer and Limitation of Liability
Although every care has been taken to assure the accuracy of the information on this website / app, SKF provides this information "AS IS" and DISCLAIMS ALL WARRANTIES, EXPRESS OR IMPLIED, INCLUDING, BUT NOT LIMITED TO, IMPLIED WARRANTIES OF MERCHANTABILITY AND FITNESS FOR A PARTICULAR PURPOSE. You acknowledge that your use of this website / app is at your sole risk, that you assume full responsibility for all costs associated with use of this website / app, and that SKF shall not be liable for any direct, incidental, consequential, or indirect damages of any kind arising out of your access to, or use of the information or software made available on this website / app.

Any warranties and representations in this website / app for SKF products or services that you purchase or use will be subject to the agreed upon terms and conditions in the contract for such product or service.

Further, for non-SKF websites / apps that are referenced in our website / app or where a hyperlink appears, SKF makes no warranties concerning the accuracy or reliability of the information in these websites / apps and assumes no responsibility for material created or published by third parties contained therein. In addition, SKF does not warrant that this website / app or these other linked websites / apps are free from viruses or other harmful elements.

Third Party Services
When viewing YouTube content via the SKF website(s) (i.e. using YouTube API Services), you agree to be bound by the YouTube Terms of Service.

Copyright
Copyright in this website / app copyright of the information and software made available on this website / app rest with SKF or its licensors. All rights are reserved. All licensed material will reference the licensor that has granted SKF the right to use the material. The information and software made available on this website / app may not be reproduced, duplicated, copied, transferred, distributed, stored, modified, downloaded or otherwise exploited for any commercial use without the prior written approval of SKF. However, it may be reproduced, stored and downloaded for use by individuals without prior written approval of SKF. Under no circumstances may this information or software be supplied to third parties.

This website /app includes certain images used under license from Shutterstock, Inc.

Trademarks and Patents
All trademarks, brand names, and corporate logos displayed on the website / app are the property of SKF or its licensors, and may not be used in any way without prior written approval by SKF. All licensed trademarks published on this website / app reference the licensor that has granted SKF the right to use the trademark. Access to this website / app does not grant to the user any license under any patents owned by or licensed to SKF.

Changes
SKF reserves the right to make changes or additions to this website / app at any time.