Product Banner

DALI-2 to BACnet/IP Server Application with 2 DALI channels

Item number: IN704DAL1280000

Integrate any DALI/DALI-2 driver and DALI-2 light or occupancy sensor with a BACnet/IP BMS or controller. This integration aims to make DALI devices and their data and resources accessible from a BACnet-based control system or device as if they were a part of the BACnet system and vice versa.

DALI to BACnet/IP- 2 DALI channels

Features and benefits

BACnet support

The gateway is BTL certified and supports the BACnet/IP protocol.

DALI support

The gateway is DALI-2 certified and supports DALI/DALI-2 drivers and DALI-2 input devices: Push buttons, absolute input devices, and occupancy and light sensors.

Local control options

Occupancy and light sensors, push buttons, and absolute inputs can be locally controlled from the gateway. The DALI standard device type for Energy and Diagnostic data has also been implemented.

Max 64 drivers/ballasts + 64 DALI-2 input devices per channel

Supports up to 64 drivers/ballasts + 64 DALI-2 input devices (sensors/push buttons/absolute inputs) per channel.

BACnet advanced features

BACnet's advanced features, such as calendars, trend logs, schedules, and more, are available.

Easy DALI commissioning/integration w/Intesis MAPS

Integration and DALI commissioning processes are managed via the Intesis MAPS configuration tool. Templates can be imported and reused as often as needed, significantly reducing commissioning time.

Color control

RGB and tunable white controls are available in Intesis MAPS, to cover the demand for Human Centric Lighting.

Signals and power

A DALI power supply is integrated into the gateway, so no external DALI power supply is required. Up to 10,000 signals can be defined in total, with a guaranteed output current of 230 mA.

DALI-2 to BACnet/IP Server Application with 2 DALI channels


Banner

General

Net Width (mm)	88
Net Height (mm)	90
Net Depth (mm)	58
Net Weight (g)	224
Packed Width (mm)	127
Packed Height (mm)	86
Packed Depth (mm)	140
Packed Weight (g)	386
Operating Temperature °C Min	-10
Operating Temperature °C Max	60
Storage Temperature °C Min	-30
Storage Temperature °C Max	60
Power Consumption (W)	12
Input Voltage (V)	24 VDC, 12 W.
Power Connector	3-pole
Configuration	Intesis MAPS
Capacity	2 DALI channels: each channel supports 64 drivers/ballasts and 64 DALI-2 input devices (sensors, push buttons, or absolute inputs)— up to 10000 signals.
Installation Conditions	This gateway is designed to be mounted inside an enclosure. If the unit is mounted outside an enclosure, precautions should always be taken to prevent electrostatic discharge to the unit. When working inside an enclosure (e.g., making adjustments, setting switches, etc.), typical anti-static precautions should always be followed before touching the unit.
Content of Delivery	Intesis Gateway, Installation Manual, USB Configuration cable.

DALI-2 to BACnet/IP Server Application with 2 DALI channels


Banner

General

Not Included (in delivery)	Power supply not included.
Mounting	DIN rail mount (bracket included), Wall mount
Housing Materials	Plastic
Warranty (years)	3 years
Packaging Material	Cardboard

Identification and Status

Product ID	IN704DAL1280000_BAC_DAL
Country of Origin	Spain
HS Code	8517620000
Export Control Classification Number (ECCN)	EAR99

Physical Features

Connectors / Input / Output	Power supply, two DALI channels, Ethernet, Console port USB Mini-B type, USB storage.
LED Indicators	Gateway and communication status.
Push Buttons	Factory reset.
DIP & Rotary Switches	Not used.
Battery Description	Manganese Dioxide Lithium button battery.

Certifications and Standards

ETIM Classification	EC001604

DALI-2 to BACnet/IP Server Application with 2 DALI channels

Banner

Use Case

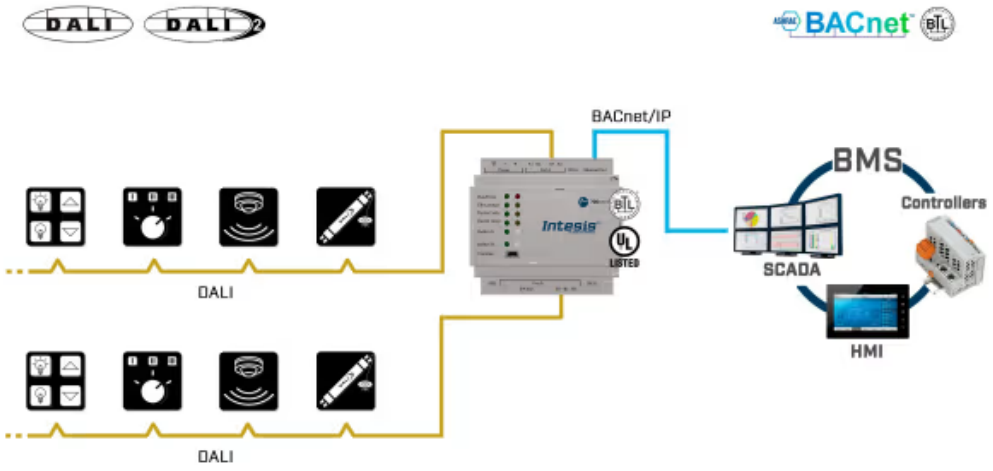

Integration example.

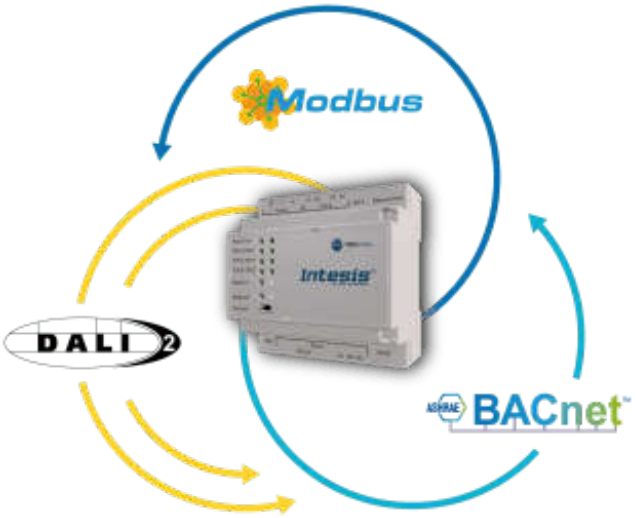

Use Intesis MAPS to change the protocol: DALI, Modbus or Bacnet