EVC944

Connecting cable with plug

ASTGH050MSD0005C05

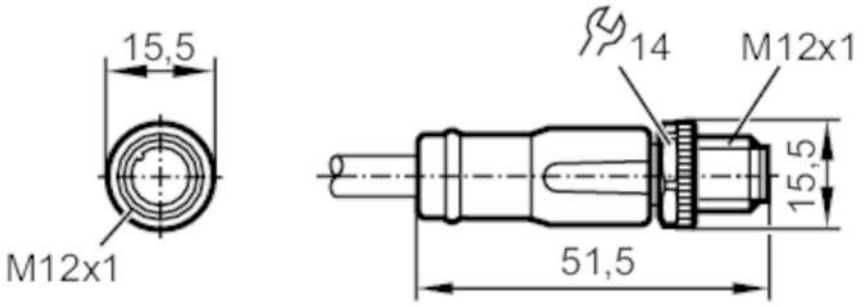

Application		
Special feature		Halogen-free; Gold-plated contacts; Screened cable; Drag chain suitability
Application		CAN bus
Electrical data		
Operating voltage	[V]	< 30 AC / < 36 DC
Max. current load total	[A]	4
Operating conditions		
Ambient temperature	[°C]	-25...80
Storage temperature	[°C]	-25...55
Storage humidity	[%]	10...100
Other climatic conditions for storage according to stated class		1K22/ DIN 60721-3-1
Protection		IP 67; IP 68; IP 69K
Mechanical data		
Weight	[g]	495.45
Dimensions	[mm]	15.5 x 15.5 x 51.5
Moulded-body material		PUR
Material nut		brass, nickel-plated
Drag chain suitability		yes
Drag chain suitability	bending radius for flexible use	min. 10 x cable diameter
	travel speed	max. 3.3 m/s for a horizontal travel length of 5 m and max. acceleration of 5 m/s²
	bending cycles	> 5 Mio.
	torsional strain	± 180 °/m

EVC944

Connecting cable with plug

ASTGH050MSD0005C05

Remarks	
Pack quantity	1 pcs.

Electrical connection

Cable: 5 m, PUR, Halogen-free, lilac, Ø 8.4 mm, shielded; RD / BK: 2 x 0.75 mm² (42 x Ø 0.15 mm) + WH / BU: 2 x 0.5 mm² (19 x Ø 0.19 mm) + screen: 1 x 0.75 mm² (42 x Ø 0.15 mm)

Electrical connection - plug

Connector: 1 x M12, straight; coding: A; Moulded body: PUR, black; Locking: brass, nickel-plated; Contacts: gold-plated; Tightening torque: 0.6...1.5 Nm

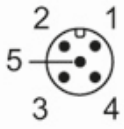

Connection

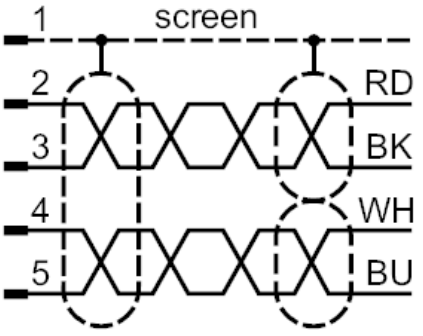

	Core colours :
BK =	black
BU =	blue
RD =	red
WH =	white
screen =	screen