MURR ELEKTRONIK
stay connected

SVS VALVE PLUG FORM A 18MM FIELD-WIREABLE

24…230V LED PG9 Bridge Rectifier

Form A (18 mm)
24...230 V AC/DC
LED and bridge rectifier
PG9
Plastic housings with good resistance against chemicals and oils.
The resistance to aggressive media should be individually tested for your application. Further details on request.

Link to Product

Illustration



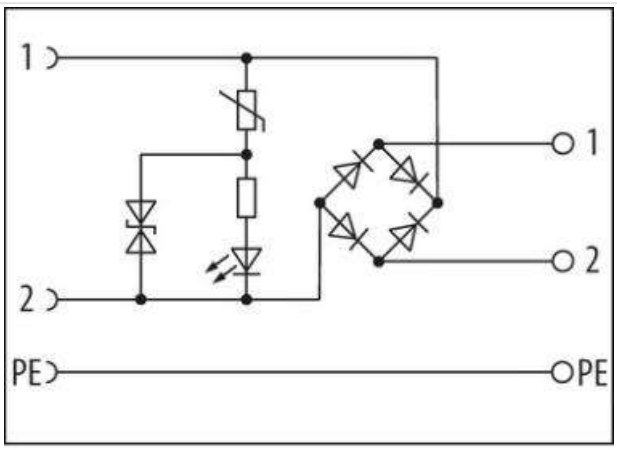

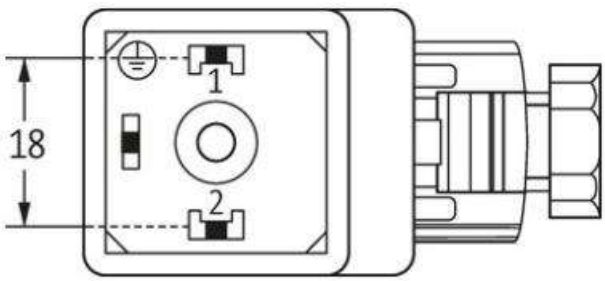

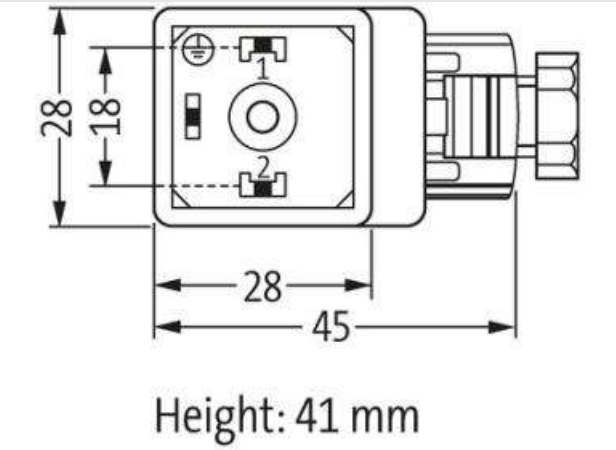

Product may differ from Image

Side 1	
Degree of protection (EN IEC 60529)	IP65
Commercial data	
ECLASS-6.0	27279221

The information in this Product-PDF has been compiled with the utmost care.
Liability for the correctness completeness and topicality of the information is restricted to gross negligence. Version: 2024-01-31

ECLASS-7.0	27440104
ECLASS-8.0	27440104
ECLASS-9.0	27440102
ECLASS-10.1	27440105
ECLASS-11.1	27440105
ECLASS-12.0	27440105
ETIM-5.0	EC002062
customs tariff number	85366990
GTIN	4048879187367
Packaging unit	1
Electrical data | Supply	
Operating voltage AC min.	24 V
Operating voltage AC max.	230 V
Operating voltage DC min.	24 V
Operating voltage DC max.	230 V
Current operating per contact max.	1 A
Diagnostics	
Status indication LED	yellow
Installation | Connection	
Tightening torque	0,4 Nm
Mounting set	M3
Installation | Pin assignment	
No. of poles	2 + PE
Device protection | Electrical	
Additional condition protection degree	inserted, screwed
Pollution Degree	2
Rated surge voltage	4 kV
Material group (IEC 60664-1)	III
Mechanical data | Mounting data	
Mounting method	PG9
Clamping range min.	5 mm
Clamping range max.	9,5 mm
Environmental characteristics | Climatic	
Operating temperature min.	-20 °C
Operating temperature max.	60 °C

The information in this Product-PDF has been compiled with the utmost care.
Liability for the correctness completeness and topicality of the information is restricted to gross negligence. Version: 2024-01-31