87045 LIMOGES Cedex
Telephone: +33(0)5 55 06 87 87 - Fax: +33(0)5 55 06 88 88

Mosaic™
HDMI socket

Cat. No(s): 0 787 68/78 - 0 792 75 - 0793 78

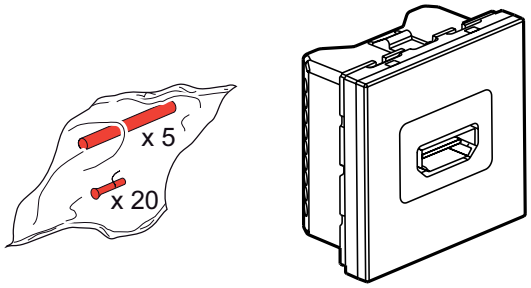

0 787 68 - 0 792 75

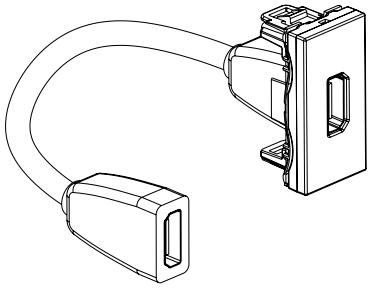

0 787 78 - 0 793 78

1. USE

The HDMI socket is an audio-video socket for connecting terminals such as plasma or LCD televisions, home-cinema systems, DVD recorders, satellite demodulators, etc.
The connection is a high-fidelity digital format. To ensure a high-quality result, the connection between the two devices should not exceed a certain distance (see electrical characteristics table). For longer connections, it is necessary to provide a booster system in the installation.
The connectors are type A and conform to the HDMI standard.

2. RANGE

Description	Cat. No.	Modules	Fixing method	Connection method	Weight (g)
HDMI socket, white	0 787 68	2	Clips	Screw	28
HDMI socket, aluminium	0 792 75	2	Clips	Screw	28
Preterminated HDMI socket, white	0 787 78	1	Clips	Plug-in	45
Preterminated HDMI socket, aluminium	0 793 78	1	Clips	Plug-in	45

3. DIMENSIONS

Cat. Nos: 0 787 68 - 0 792 75

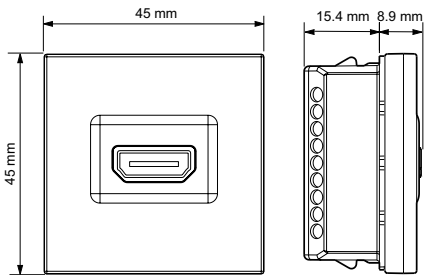

3. DIMENSIONS *(continued)*

Cat. Nos: 0 787 78 - 0 793 78

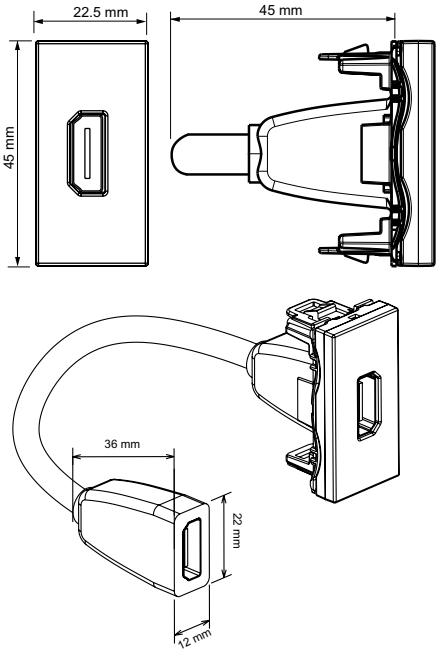

4. CONNECTION

Cat. Nos: 0 787 68 - 0 792 75

Wide terminal block which accommodates conductors 1 mm^2 max.
Supplied in a bag containing:
- crimping ferrules for conductors < 0.5 mm^2
- thermoformable sheaths

Cable bending radius: 35 mm

4. CONNECTION *(continued)*

a) Stripping the cable:

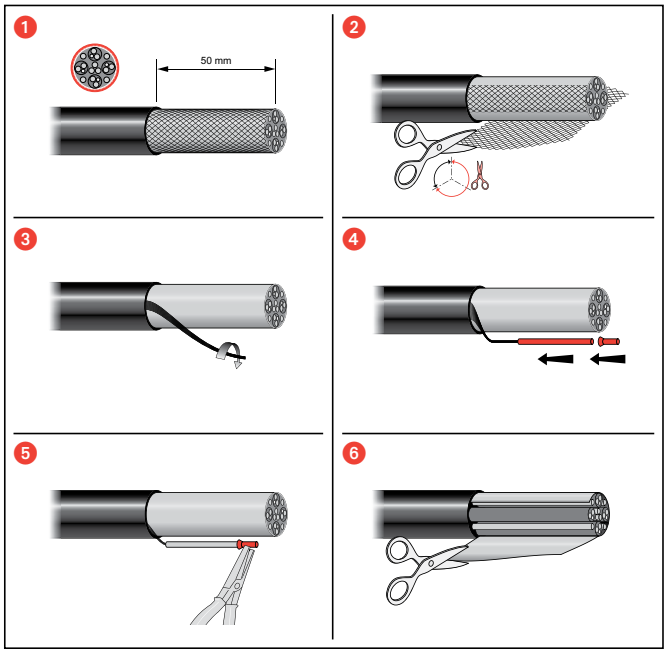

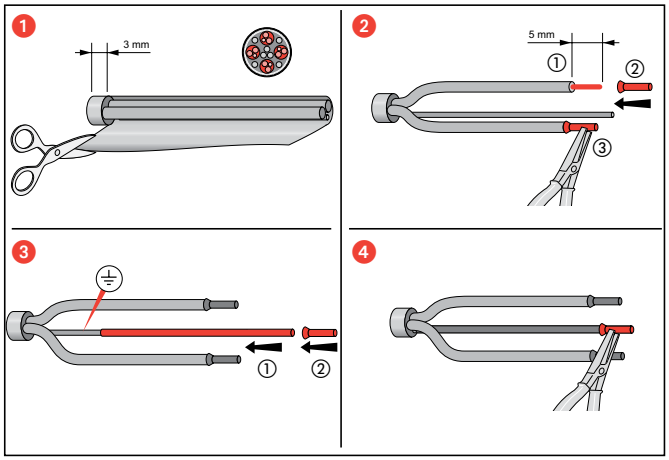

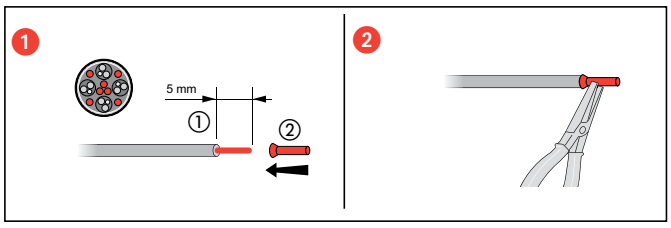

b) Wiring:

Comply with the wiring diagram below:

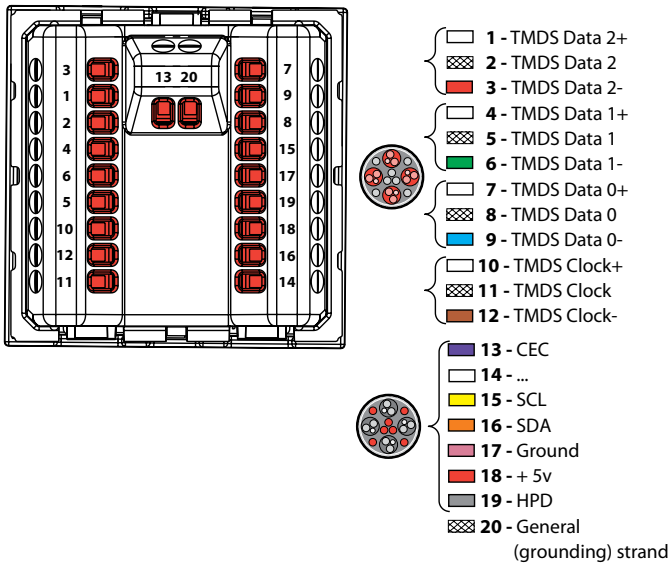

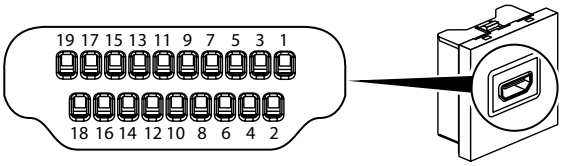

5. TECHNICAL CHARACTERISTICS

5.1 Electrical characteristics

Values indicated for an installation set up in accordance with best practice and connected in compliance with existing standards. Any additional accessories and cords should comply with these same criteria.

HDMI version	Max. resolution in pixels	Min. HDMI version cable - max. length	Min. HDMI version cord - max. length	Total max. length of link	Min. depth of box
Pre-terminated	1080 P	10 m	1.5 m	13 m	50 mm
Screw	1080 P	5 m	1.5 m	8 m	50 mm

5.2 Overview of the installation

0 787 68 - 0 792 75

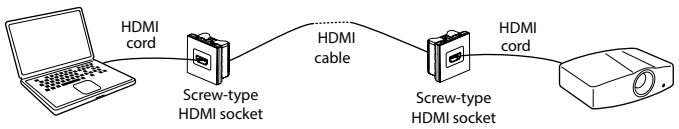

0 787 78 - 0 793 78

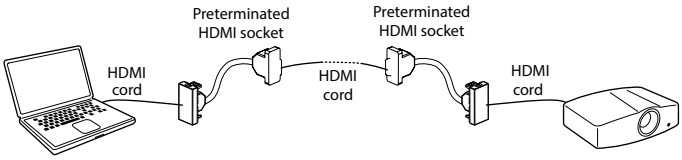

5.3 Mechanical characteristics

Impact tests: IK 04
Penetration by solid/liquid matter: IP 40

5.4 Material characteristics

Cover plate: ABS (RAL 9003)
Self-extinguishing: 650°C/30 s

5.5 Climate characteristics

Storage temperature: - 10°C to + 70°C
Usage temperature: -5°C to 50°C

6. CARE

Clean the surface with a cloth.
Do not use acetone, tar-removing cleaning agents or trichloroethylene.

6.1 Resistance to cleaning products

Resistant to the following products:
- Hexane (EN 60669-1)
- Methylated spirit
- Soapy water
- Diluted ammonia
- Bleach diluted to 10%
- Window-cleaning products
- Pre-impregnated wipes

6.2 Resistance to hospital-grade cleaning products

Resistant to the following products:
- Anios
- Surfanios
- Bactilysine
- Hydrogen peroxide (35%)

Caution: Always test before using other special cleaning products.