E40562

Gasket

SEAL RING EPDM DN40

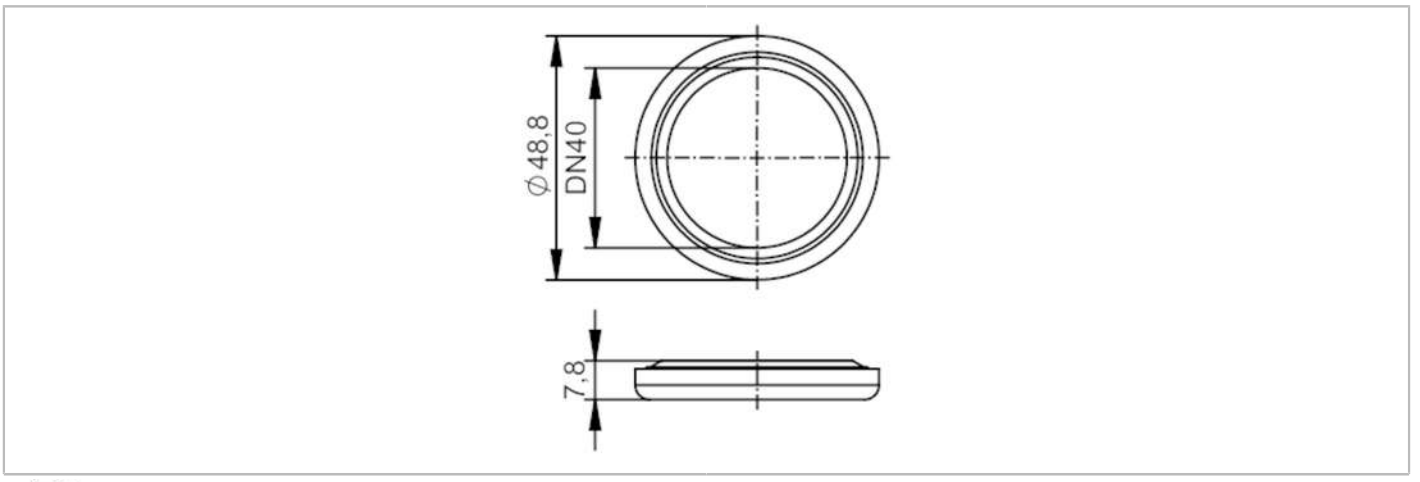

EC 1935/2004 FCM

Application		
Design		for volumetric flow meters SMF
Application		food and beverage industry; hygienic systems
Mechanical data		
Weight	[g]	11.7
Materials		EPDM
Nominal diameter		DN40 (1 1/2“)
Remarks		
Pack quantity		2 pcs.