MOFLASH SIGNALLING

INSTALLATION INFORMATION

PLEASE READ PRIOR TO INSTALLATION



S00638 - ISSUE 1

LED701/700 Series Dual Colour

VISUAL SIGNALLING DEVICE

EN Translations & Documentation, scan **QR Code**
FR Traductions & Documentation, scannez le **QR Code**
DE Übersetzungen & Dokumentation, **QR-Code** scannen
IT Traduzioni & Documentazione, scansionare il **Codice QR**
ES Traducciones y documentación, escanear **código QR**

APPROVALS AND CONFORMITIES

www.moflash.com

technical@moflash.co.uk

General Installation Notes

- Installation must be carried out in accordance with the latest codes and regulations by a qualified electrician.
- Ensure power is disconnected prior to installation or maintenance to avoid danger of electrical shock.
- Environmental exposure conditions during installation should be dry. Moist or wet conditions should be avoided.
- The Lens of the product is Polycarbonate plastic. Do not clean with petroleum-based cleaners.
- Avoid mounting the Beacon where it will be subjected to excessive vibration.

Installation Instructions

Unscrew the four plastic retaining screws that secures the Lens assembly to the back box.

Carefully remove the conduit knockout/s required in the back box to suit the desired Cable Gland/s for installation. 4 conduit size options are available: M16, M20, M25 and M32.

Please note: Ensure the Cable Gland being used has the correct IP rating.

Locate and secure the back box to an appropriate surface by using the 4 x 4.5mm fixing holes located in the base with 4mm screws (not supplied).

Secure the Cable Gland/s into the chosen conduit knockout/s then pull the power cable through and into the back box ready to make the necessary connections.

Connections are to be made as indicated below **(See Wiring Diagram 1):**

- **Colour 2 Sig.** - Signal line connection for 3rd wire flashing on Colour 2
- **Colour 2 Live** - Main control voltage connection for Colour 2
- **Neutral** - Neutral/0v connection for both colours
- **Colour 1 Live -** Main control voltage connection for Colour 1
- **Colour 1 Sig.** - Signal line connection for 3rd wire flashing on Colour 1

Please note: Connections need to be made to the **Colour 1** and **Colour 2** Terminals and Switches **S1** and **S2** used to control functionality.

The final output signal required now needs to be set using the two-way DIP Switches **(S1 or S2)** located on the PCB. The flash rates are controlled by changing the switch positions shown below:

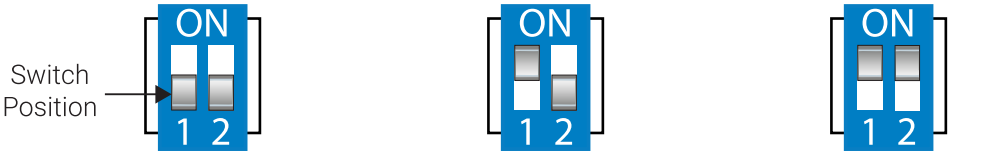

Static/Steady | Flashing **60 FPM** | Flashing **120 FPM**

Locate the Lens back onto the Base by securing the four plastic retaining screws.

Third Wire Functionality

This product incorporates third wire functionlity that allows the user to go from a Static output to Flashing. To allow for this control, the Switch (**S1 or S2**) needs to be set to Static and then a link wire is required between Live and Sig. **(See Wiring Diagram 2)**
Wiring Diagram 2 is an example of how to control Third Wire Functionality. This method also applies to Colour 2 Terminals on the PCB.

Cabling Details

- Maximum 2.5mm² (14 – 22 AWG).
- **NOTE:** The 701/700 series can be used in a 'loop in' 'loop out' daisy chain application using the terminals provided on the PCB, however the wire size must not exceed 2.5mm².

Wiring Diagram

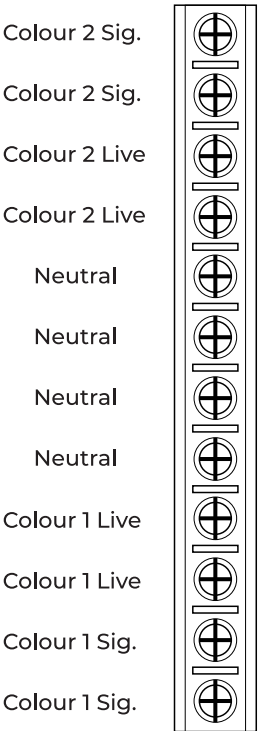

Wiring Diagram 1

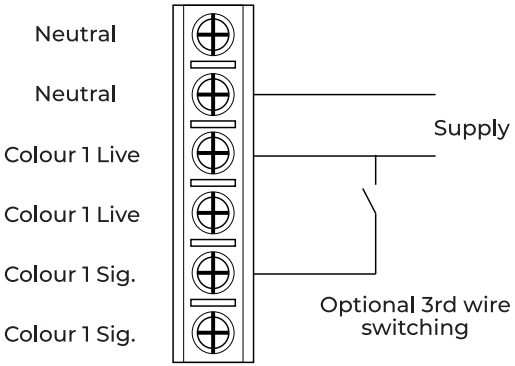

Wiring Diagram 2

Moflash Signalling Limited accepts no liability for any consequences following use of this document. Any technical specifications and products referred to within this document are subject to change without notice due to continual improvement and product development policies. All dB(A) figures are subject to environmental conditions. The units are sold under Moflash standard conditions of sale, available on request. Additional resources, including installation sheet translations, certificates and DoCs are available from the **www.moflash.co.uk** website**.**