Brand of NTN corporation

Technical data

5304NRZZG15

Double row angular contact ball bearings

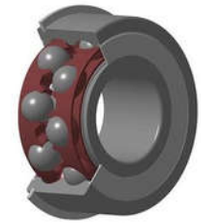

Double row angular contact ball bearing, polyamide cage, snap ring and groove on outer diameter, shield on both sides

VISUAL (S)

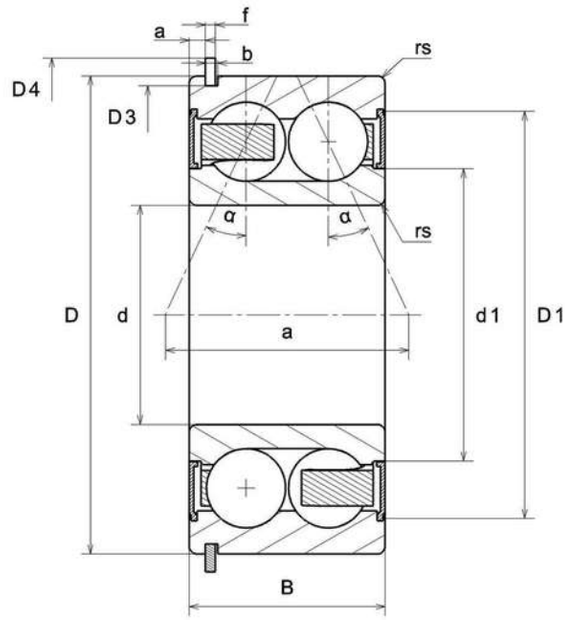

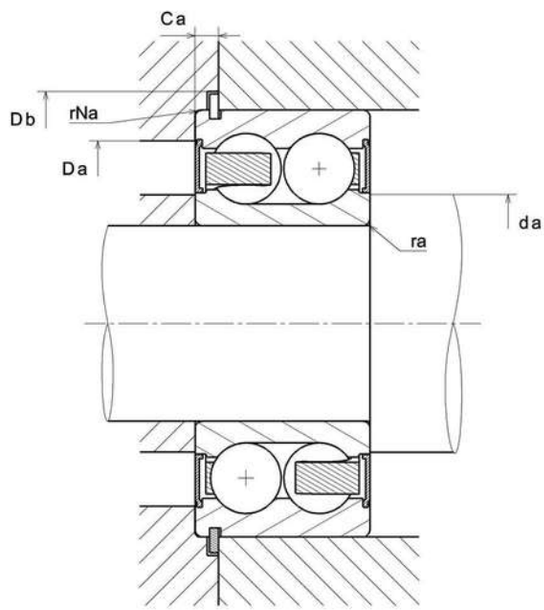

5304NRZZG15
Double row angular contact ball bearings

PRODUCT DEFINITION	
Brand	SNR
d - Internal diameter	20 mm
D - External diameter	52 mm
B - Bearing/Inner ring width	22,2 mm
d1 - External diameter inner ring	29,2 mm
D1 - Inner diameter outer ring	45 mm
a - Charge load application point	26,4 mm
- Contact angle	25 °
a min - Min position Groove	2,31 mm
a max - Max position groove	2,46 mm
rs - Min fillet radius	1,1 mm
rNs - Min fillet radius	0,6 mm
D3 - Max bottom groove diameter	49,73 mm
b min - Min groove width	1,35 mm
b max - Max groove width	1,65 mm
r0 max - Max bottom groove radius	0,4 mm
D4 max - Max outer diameter of assembled stop ring	57,9 mm
f - Stop ring thickness	1,07 mm
Snap ring reference	R 52
Radial clearance class	CN
Precision class	P0
Mass	0,197 kg

5304NRZZG15
Double row angular contact ball bearings

PRODUCT PERFORMANCE	
C - Dynamic load	22200000 mN
C0 - Static load	14600000 mN
Cu - Fatigue limit load	920000 mN
f0 - Coefficient	13.2
N ref - Reference thermal speed	54600 °/s
N lim - Mechanical Limit Speed	60000 °/s
Tmin - Min operating temperature	253,15 °K
Tmax - Max operating temperature	393,15 °K

BEARING FREQUENCIES	
BPFO - Over rolling frequency on outer ring (60 rpm)	3.145 Hz
BPFI - Over rolling frequency on inner (60 rpm)	4.855 Hz
BSF - Over rolling frequency on rolling element (60 rpm)	4.044 Hz
BRF - Rotational frequency – rolling element (60 rpm)	2.022 Hz
FTF - Rotational frequency - cage (60 rpm)	0.393 Hz

ABUTMENT	
da min - Min shoulder diameter IR	26,5 mm
da max - Max shoulder diameter IR	29,2 mm
Da max - Max shoulder diameter OR	45,5 mm
Ca min - Mini segment position	3,33 mm
Ca max - Max segment position	3,58 mm
ra max - Max shaft & housing fillet radius	1 mm
rNa max - Max fillet radius on segment side	0,6 mm
Db min - Min stop ring position diameter	58,6 mm