# DF2208

## Electronic circuit breaker

Fuse/IO-Link/24VDC/8A

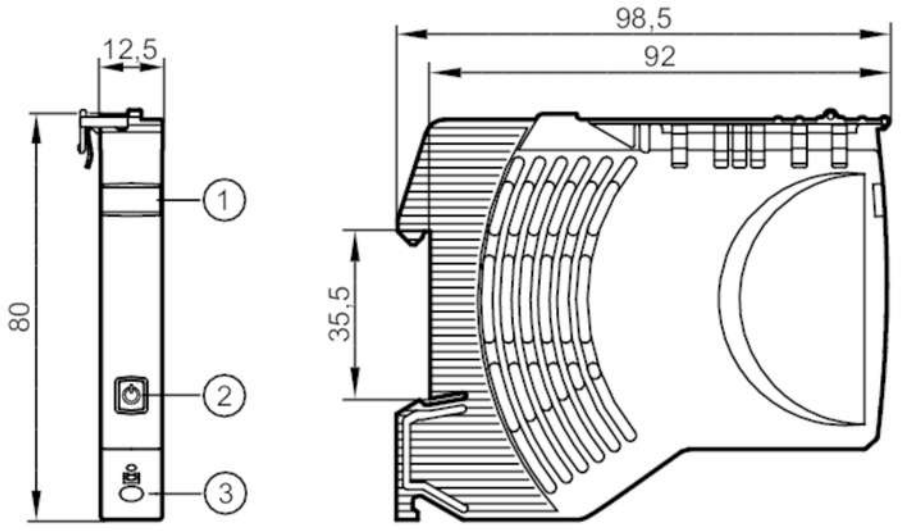


1 panel for labelling
2 pushbutton on / off / reset status LED 1
3 push-in terminal Output 1

| | | |
|---|---|---|
| **Electrical data** | | |
| Operating voltage | [V] | to SELV/PELV |
| Nominal voltage DC | [V] | 24 |
| Input voltage DC | [V] | 18...30 |
| Protection class | | III |
| Mains buffering time (nominal voltage 24 V DC) | [ms] | 10 |
| Closed-circuit current | [mA] | 10 |
| Power loss (nominal voltage 24 V DC) | [W] | 1.52 |
| Number of channels | | 1 |
| Nominal current | [A] | 8 |
| Nominal current (Fail Safe Element) | [A] | 8 |
| **Outputs** | | |
| Load capacitance, total | [mF] | 20 |
| **Operating conditions** | | |
| Ambient temperature | [°C] | -25...60 |
| Storage temperature | [°C] | -40...70 |
| Protection | | IP 20; (on the front) |
| Pollution degree | | 2 |

| | | |
|---|---|---|
| **Tests / approvals** | | |
| EMC | EN 61000-6-3 | radiation of interference |
| | EN 61000-6-2 | immunity |

# DF2208

## Electronic circuit breaker

**Fuse/IO-Link/24VDC/8A**

| Mechanical data | | |
|---|---|---|
| Weight [g] | 71.5 | |
| Housing | housing for DIN rail mounting | |
| Type of mounting | mounting on DIN rail;  (TH35 (EN 60715)) | |
| Dimensions [mm] | 80 x 12.5 x 98.5 | |

| Displays / operating elements | | |
|---|---|---|
| Display | status | 1 x LED, red / green / orange |
| Operating elements | 1 x | pushbutton |

**Electrical connection**

push-in terminals:

contact lever/strip:

Connection

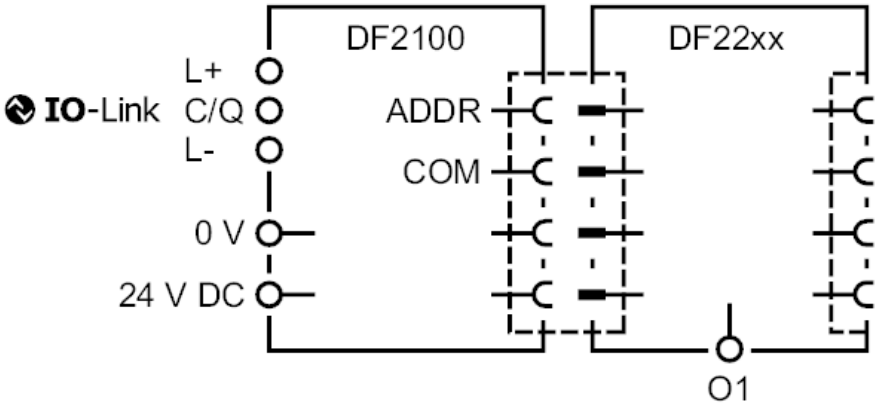


**Diagrams and graphs**

output characteristics

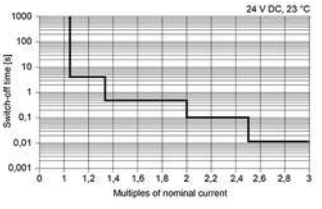


time-current characteristics