

3-pole



3-pole EMERGENCY STOP



6-pole



6-pole EMERGENCY STOP

Technical data

		Ex-safety switches 40 A
Marking accd. to 2014/34/EU		Ⓔx II 2 G Ex ed ia IIC T6 / Ⓔx II 2 D Ex tD A21 IP66 T80 °C
EC-Type Examination Certificate		PTB 99 ATEX 1161
IECEx Certificate of Conformity		BKI 07.0012
Marking accd. to IECEx		Ex ed ia IIC T6 Ex tD A21 IP66 T53 °C
Permissible ambient temperature		–20 °C up to +40 °C[1)]
Rated voltage		up to max. 690 V
Rated current		max. 40 A
Frequency		50/60 Hz
Rated making/breaking capacity AC-3 accd. EN 60947-3		U_e 230 V / I_e 40 A U_e 400 V / I_e 40 A U_e 500 V / I_e 40 A U_e 690 V / I_e 32 A
Rated making-/ breaking capacity DC 1/DC 23 accd. EN 60947-3		U_e 60 V / I_e 40 A (1 contact) U_e 120 V / I_e 40 A (2 contacts in series)
Switch-disconnector for maintenance accd. to IEC 62262-1		Class 1
Back-up fuse		up to 400 V AC: 80 A gG up to 500 V AC: 80 A gG up to 690 V AC: 63 A gG
Connecting terminals	main contact auxiliary/signal contact	2 x 16 mm² 2 x 4 mm² (option)
Protection class		I
Degree of protection accd. to EN 60529		IP66
Cable glands/enclosure drilling		M25 cable gland see ordering details M40 cable gland see ordering details Option: metal flange with thread
Weight	3-pole 4-pole 6-pole	approx. 2.30 kg approx. 2.75 kg approx. 6.50 kg
Enclosure material		glass-fibre reinforced polyester
Enclosure colour		black
Auxiliary contact (option)		1 x NO making - lagging; breaking - leading 1 x NC (only 6-pole version) making - leading; breaking - lagging
Padlocking facility		can be locked in OFF position with 3 commercially available padlocks (Ø max. 6 mm)

[1)] Other ambient temperatures on request



6-pole EMERGENCY STOP



6-pole



3-pole EMERGENCY STOP



3-pole

Ordering details

Content	Cable gland	Auxiliary contact	Order No.
Safety switch 40 A 3-pole			
3-pole	2 x M40 / 1 x M25	1 NO	**GHG 263 2301 R0001**
3-pole	2 x M40	none	**GHG 263 2303 R0001**
3-pole EMERGENCY STOP	2 x M40 / 1 x M25	1 NO	**GHG 263 2301 R0002**
3-pole EMERGENCY STOP	2 x M40	none	**GHG 263 2303 R0002**
Safety switch 40 A 4-pole			
4-pole	2 x M25	1 NO + 1 NC	**GHG 263 2301 R0007**
4-pole	2 x M25	none	**GHG 263 2303 R0003**
4-pole	2x M40 / 1 x M25	1 NO + 1 NC	**GHG 263 2301 R0009**
4-pole	2x M40	none	**GHG 263 2303 R0004**
Safety switch 40 A 6-pole			
6-pole	4 x M40 / 1 x M25	1 NO + 1 NC	**GHG 263 0050 R0001**
6-pole	4 x M25	1 NO + 1 NC	**GHG 263 0050 R0006**
6-pole EMERGENCY STOP	4 x M40 / 1 x M25	1 NO + 1 NC	**GHG 263 0050 R0002**

Customized version on request, auxiliary contacts in Ex ia available

Accessories

Type	Application	Fixing method	Order No.
Mounting plate for Ex-safety switches 40 A 3-pole			
Size 3	Wall mounting	snap on	**GHG 610 1953 R0118**
Size 3	Pipe clamp	snap on	**GHG 610 1953 R0110**
Size 3	Trellis-work mounting	snap on	**GHG 610 1953 R0118**

Type	Application	Fixing method	Order No.
Mounting plate for Ex-safety switches 40 A 6-pole			
Size 3	2 x pipe clamp	screw-on[1)]	**GHG 610 1953 R0110**

[1)] observe mounting distance

Type	OU	Order No.
Accessories for mounting plates		
Label for label holder and mounting plates size 4 and size 5	10	**GHG 610 1953 R0011**
Blind plug for mounting plate size 4 and size 5 1 set = 1 pcs.	10	**GHG 610 1953 R0134**
Plug-in fastener for CEAG modules with 5.5 mm and 11 mm mounting feet 1 set = 4 pcs.	10	**GHG 610 1953 R0041**
Mounting set for pipes 1" (of 27 - 30 mm) for mounting plates with pipe fixing	10	**GHG 610 1953 R0020**

Type	Application	OU	Order No.
Canopies			
Size 4	for mounting plate size 4	1	**GHG 610 1955 R0107**

Please pay attention that only order units (OU) according to the ordering details can be delivered.



3-pole



3-pole EMERGENCY STOP



6-pole



6-pole EMERGENCY STOP

Dimension drawing

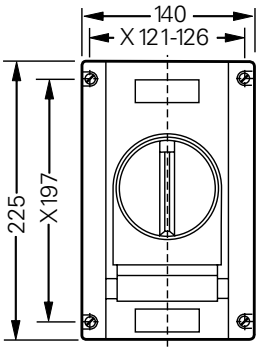

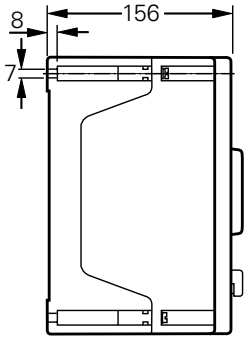

3/4-pole

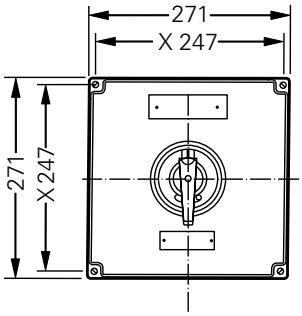

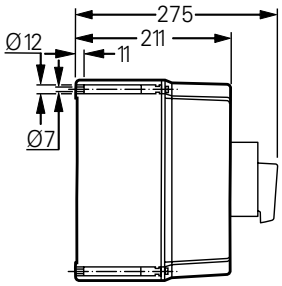

6-pole

X = fixing dimensions

Dimensions in mm