Brand of NTN corporation

Technical data

EXFE211

Bearing units



Grey cast housing, radial insert ball bearing with eccentric locking collar, seal with slinger

KIT CONTENT

EX211G2, FE211

VISUAL (S)

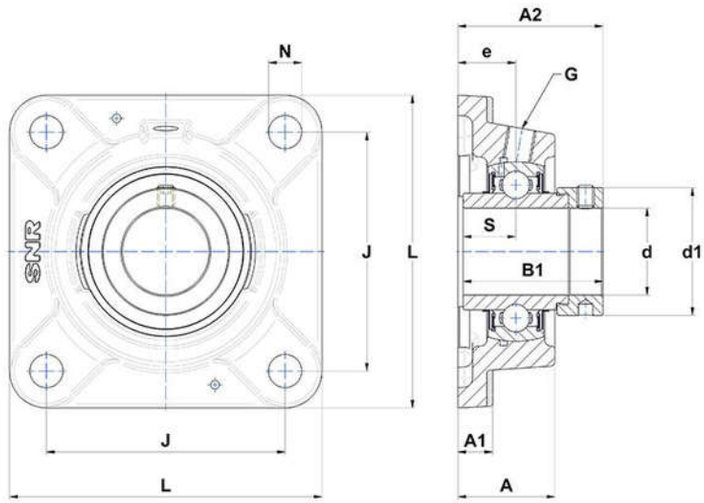

PRODUCT DEFINITION

Brand	SNR
A - Housing height	48,5 mm
A1 - Housing foot height / flange height	15 mm
A2 - Total height from mounting surface	74,6 mm
B - Width of Inner Ring	55,4 mm
B1 - Overall width Inner Ring	71,3 mm

PRODUCT DEFINITION	
d - Shaft diameter	55 mm
d1 - Outer dia of eccent. Lock. collar / nut of adapter sleeve	74,5 mm
e - Distance mounting surface to bearing center	31 mm
G - Grease fitting	R1/8"
J - Mounting holes distance	130 mm
L - Housing width / diameter	162 mm
N - Mounting hole dimension	18 mm
S - Distance front side/bearing centre	27,7 mm

PRODUCT PERFORMANCE	
C - Dynamic load rating	43550000 mN
C0 - Static load rating	29200000 mN
Operating temperature min.	253,15 °K
Operating temperature max.	373,15 °K

OTHER FEATURES	
Mass	3,93 kg
Recommended tightening torque for set screw	22 N-m