ITW Switches

SERIES 76-59 - PUSHBUTTONS

The Series 76-59 of pushbutton switches are extremely rugged making them particularly suited to applications in which vandal resistance is a necessity.

The switch body and buttons are machined from hard-wearing stainless steel and come in a front mounting style.

Series 76-59 all provide momentary action and are based on our proven Series 59 push buttons.

Connections are made via the solder terminal at the rear of the switch.



APPLICATIONS:

- Vandal resistant and robust industrial requirements
- Flush-with-panel installation requirement
- Process control
- Railway carriage equipment
- External security door controls
- Elevators
- Fishing vessels
- Crane gantry equipment
- Earth moving equipment
- Upper deck yachting equipment
- Medical instrumentation

KEY FEATURES:

- Vandal resistant
- Panel sealed to IP67
- Non – rotating button
- Machined from stainless steel
- Wide temperature range
- Gold contacts
- Solder terminals

NON-STANDARD OPTIONS:

- PCB terminals
- Engraving

INGRESS PROTECTION

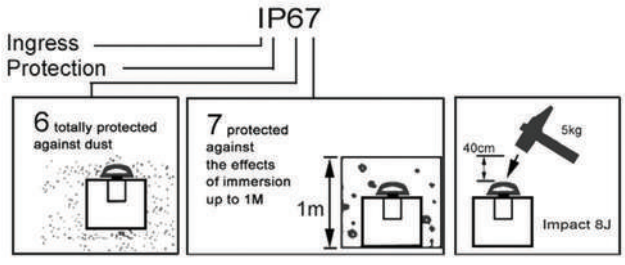

Contact an Authorized Distributor or Factory for Pricing

PRODUCT DRAWINGS

76-5910x

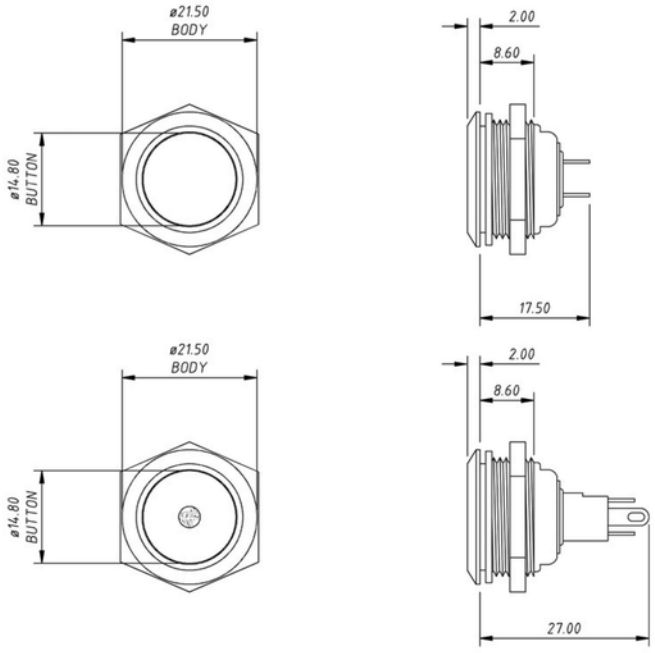

PANEL MOUNTING & CONSTRUCTION:

The 76-59 series mounts from the front into a 19.25 mm diameter panel cut out. Panel sealing is achieved by means of a sealing washer which is fitted to the switch body before it is inserted into the panel hole. The switch is then held in place by a lock-nut screwed on from the rear.

CIRCUIT FORM



ORDERING INFORMATION:

Series	Button Style	Mounting	LED Colour*
76-59	1 Flush	0 Front panel 15mm button	R Red
			G Green
			B Blue

76-59 - [ ] - [ ] - [ ]

* This digit only required for illuminated part numbers

MECHANICAL / ELECTRICAL / ENVIRONMENTAL CHARACTERISTICS:

Operating force (nom):
3N

Panel thickness:
1.5 mm to 8 mm

Body Diameter:
M19 thread

Panel cut out:
Ø 19.25 mm

Life (min):
1,000,000 cycles

Travel:
2.3 mm

Dielectric strength:
1KV AC 1 minute

Insulation resistance:
1GΩ @500V d.c

Contact resistance (initial):
50mΩ

Current rating (typical):
400mA at 32V a.c. resistive
100mA at 50V d.c. resistive
125mA at 125V a.c. resistive

Life:
500,000 cycles (max load)
@ 70°C

Ingress protection:
IP67 (Panel Sealed)

Operating temperature range:
-30°C to + 105°C

Body material:
Stainless steel

Actuator material:
Stainless steel

Contact material:
Gold plated, nickel

Copyright © 2023. ITWSwitches™ 10/2023