PRODUCT DATASHEET
DP HOUSING 600 P 2XLAMP IP65

DAMP PROOF HOUSING GEN 3 | Damp-proof luminaire for T8 LED lamps with tool-free luminaire connector



PERFOR-
MANCE
CLASS

Areas of application

- Parking lots, warehouses, production areas
- Car parks and underpasses
- Garages

Product benefits

- Easy and quick installation
- Prewired for easy installation of tubular AC LED lamps
- Toolless installation
- Robust housing
- Sustainable solution thanks to exchangeable light sources
- 5 years guarantee

Product features

- Luminaire housing, available for 1 or 2 T8 LED tubes
- Suitable for LED TUBE T8 EM and LED TUBE T8 CONNECTED
- Type of protection: IP65
- Integrated electrical fuse



© 2026, LEDVANCE GmbH. All rights reserved.

TECHNICAL DATA

Electrical data

Nominal voltage	220…240 V
Mains frequency	50…60 Hz
Protection class	II

Dimensions & Weight

Length	675.00 mm
Width	95.00 mm
Height	70.00 mm
Product weight	523.00 g

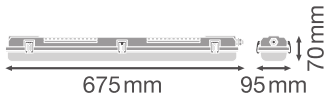

DP HOUSING 600 P 2XLAMP IP65

Materials & Colors

Product color	Gray
Housing color	Gray
RAL Color (most similar)	RAL 7040
Body material	Polycarbonate (PC)
Cover material	Polycarbonate (PC)
Light emitting surface material	Polycarbonate (PC)
Glow Wire Test according to IEC 60695-2-12	850 °C
Mercury content	0.0 mg

Application & Mounting

Ambient temperature range	-30…+40 °C

© 2026, LEDVANCE GmbH. All rights reserved.

Temperature range at storage	-20…+80 °C
Type of connection	Screwless terminal, 3-Pole (N, E, L)
Type of protection	IP65
Protection class IK (shock resistance)	IK08
Dimmable	No
Mounting type	Surface
Mounting location	Ceiling
Application environment	Indoor
With light source	No
Replaceable light source	No
Holder designation	G13

Certificates & Standards

Standards	CE / TÜV Rheinland / EAC / UKCA
Luminaire with limited surface temperature, "D sign"	No
Ball shot safe	No

Additional product data

Product remark	When used in very cold applications as in cold storage, a special membrane might be required to ensure lifetime

EQUIPMENT / ACCESSORIES

- All required accessories included
- Through-wiring cable kit available

Safety advice

- All electrical connections must be made by a qualified person.
- Caution, risk of electric shock.

DOWNLOAD DATA

	Documents and certificates	Document name
PDF	User instruction / safety instructions	DP HOUSING
PDF	Legal information	LI DP HOUSING

© 2026, LEDVANCE GmbH. All rights reserved.

	Documents and certificates	Document name
PDF	Legal information	Informationstext 18 Abs 4 ElektroG
PDF	Declarations of conformity	DP HOUSING
PDF	Declarations of conformity UKCA	DP HOUSING

	Photometric and lighting design files	Document name
IES	IES file (IES)	DP HOUSING 600 P 2xL IP65 incl LEDTUBE CON P7,5W
LDT	LDT file (Eulumdat)	DP HOUSING 600 P 2xL IP65 incl LEDTUBE CON P 7,5W
ULD	ULD file (DIALux)	DP HOUSING 600 P 2XLAMP IP65

	CAD/BIM files	Document name
RFA	BIM Revit 3D	Damp Proof Housing G3
STEP	CAD STEP 3D	DP HOUSING 600 P 2XLAMP IP65

	Tender texts	Document name
TXT	Tender documents	DAMP PROOF HOUSING GEN 3 600 P 2XLAMP IP65-EN

LOGISTICAL DATA

Product code	Packaging unit (Pieces/Unit)	Dimensions (length x width x height)	Gross weight	Volume
4099854118074	Folding box 1	98 mm x 663 mm x 75 mm	703.00 g	4.87 dm^3
4099854118081	Shipping box 6	678 mm x 208 mm x 237 mm	4608.00 g	33.42 dm^3

The mentioned product code describes the smallest quantity unit which can be ordered. One shipping unit can contain one or more single products. When placing an order, for the quantity please enter single or multiples of a shipping unit.

ADDITIONAL CATALOG INFORMATION

© 2026, LEDVANCE GmbH. All rights reserved.

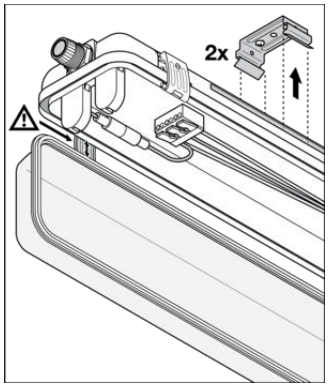

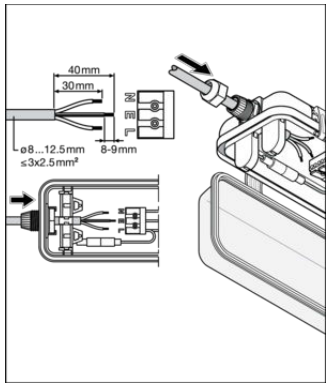

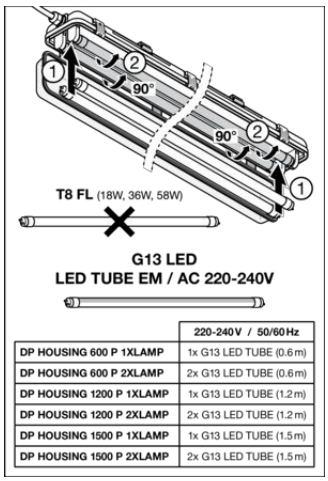

	220-240 V / 50/60 Hz
DP HOUSING 600 P 1XLAMP	1x G13 LED TUBE (0.6 m)
DP HOUSING 600 P 2XLAMP	2x G13 LED TUBE (0.6 m)
DP HOUSING 1200 P 1XLAMP	1x G13 LED TUBE (1.2 m)
DP HOUSING 1200 P 2XLAMP	2x G13 LED TUBE (1.2 m)
DP HOUSING 1500 P 1XLAMP	1x G13 LED TUBE (1.5 m)
DP HOUSING 1500 P 2XLAMP	2x G13 LED TUBE (1.5 m)

References / Links

– For Guarantee see www.ledvance.com/guarantee

DISCLAIMER

Subject to change without notice. Errors and omission excepted. Always make sure to use the most recent release.

© 2026, LEDVANCE GmbH. All rights reserved.