87045 LIMOGES Cedex
Telephone : (+33) 5 55 06 87 87 - Fax : (+33) 5 55 06 88 88

Plastic industrial boxes - IP 66

Cat. No.(s) : 350 07/13/17/22/28/33/44/47

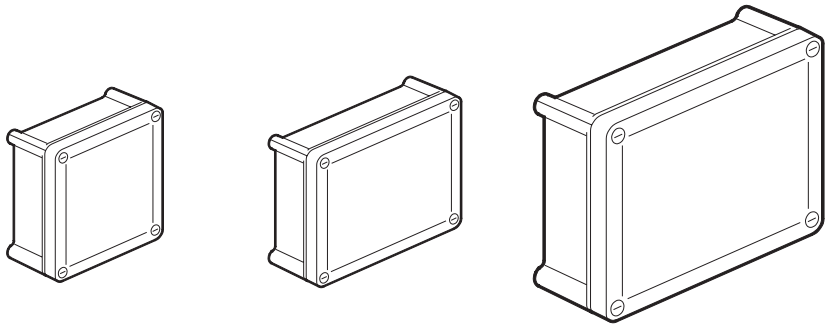

CONTENTS Page

1. General characteristics 1
2. Material characteristics 1
3. Technical characteristics 1
4. Accessories 1
5. Overall dimensions 2
6. Resistance to chemicals 2

1. GENERAL CHARACTERISTICS

Weatherproof IP 66 equipment boxes, with smooth sides and opaque cover with 1/4 turn fixing.
Grey T029.

2. MATERIAL CHARACTERISTICS

Box and cover : polycarbonate, printable, good UV-resistance.
Closing pin : polyamide.
Seal : polyurethane.
All materials are halogen-free.

3. TECHNICAL CHARACTERISTICS

- Protection index IP 66 - IK 08.
- Self-extinguishing : 750° C conform to NF EN 60695-2-1.
- Operating temperature : - 25° C to + 80° C.

Fixing options :
- inside : 4 oblong holes set deep in the box.
- outside cabling volume at the four corners with Ø 4 screws.
- wall-mounting lugs for Cat. No. 358 02 except 130 x 75 boxes.

Classe II protection ensured by the mounting screw protection plugs (supplied).

Option of mounting equipment on rail or on plain plates.

IP2x terminal block mounting at the top part, except 130 x 75 boxes.

1/4 turn opening/closing of the cover with a flat blade screwdriver.

Open/closed position indicator : I/O.

Captive cover with clip-on retainer except 310 x 240 and 360 x 270 boxes.

Adjustable hinges for all models from 130 x 130 upwards.

Sealable covers except 310 x 240 and 360 x 270 boxes.

Fixing with bolt Cat. No. 319 57.

Fixing with “PUSA 700 E” spit tool.

4. ACCESSORIES

Cat. No. 358 02 : set of 4 mounting lugs

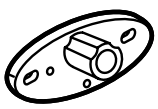

4. ACCESSORIES *(continued)*

Cat. No. 358 00 : set of two hinges for 130 x 130 to 270 x 170 boxes

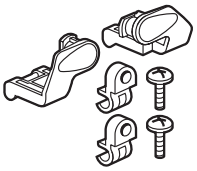

Cat. No. 358 01 : set of two hinges for 310 x 240 à 360 x 270 boxes

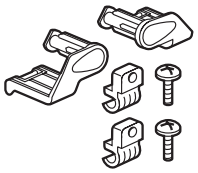

15/10 thick metal base plates, except 130 x 75 box.

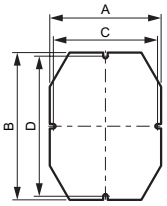

	A	B	C	D
358 10	114	114	106	106
358 11	94	139	86	131
358 12	124	164	116	156
358 13	154	204	146	196
358 14	154	254	146	246
358 15	211	271	200	260
358 16	241	321	230	310

Plastic industrial boxes - IP 66

Cat. No.(s) : 350 07/13/17/22/28/33/44/47

5. OVERALL DIMENSIONS

Boxes

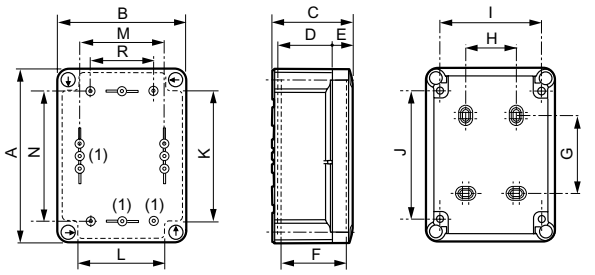

(1) Fixing pins at bottom of box for rail and mounting plate

	Dimension						Fixing box				Fixing accessories (Ø 4 mm screw supplied)				
Box Cat. No.	A	B	C	D	E	F	G	H	I	J	K	L	M	N	R
350 07	140	85	81	56	18	67	70	-	65	120	-	-	51	106	-
350 13	150	150	81	56	18	67	54	70	120	103	102	87	106	106	84
350 17	175	130	81	56	18	67	79	50	100	128	112	88	86	131	64
350 22	200	160	94	69	18	80	104	50	130	153	137	112	116	156	94
350 28	240	190	94	69	18	80	144	80	160	193	175	142	146	196	124
350 33	290	190	94	69	18	80	194	80	160	243	226	142	146	246	122
350 44	332	262	132	97	27	116	220	160	222	276	248	198	200	260	150
350 47	382	292	132	97	27	116	270	190	252	326	298	228	230	310	150

Thickness of walls up to 270 x 170 box : 2 mm.
Above this size : 3 mm thick.

6. RESISTANCE TO CHEMICALS

	Polycarbonate
Acetone	-
Acetic acid	+ (60%)
Hydrochloric acid	+ (20%)
Citric acid (10%)	+
Hydrofluoric acid (4%)	+
Lactic acid	+ (10%)
Nitric acid (10%)	+
Phosphoric acid (85%)	(+)
Sulfuric acid (25 %)	+
Tannic acid	-
Alcohol	+
Methanol	(+)
Ammonia	-
Barium chloride	+
Benzene	-
Lime	-
Sea water	+
Oils and greases	+
Milk	+
Fuel oil	+
Petroleum, petrol	(+)
Sodium chloride (20%)	+
Caustic soda (40%)	-
Sugars	+
Toluene	-
Trichlorethylene	-
Urine	+
Wine	+
Liquid chlorine	-
Aniline	-
Bleach	+

+ resists (+) limited resistance - instability

These indications are for guidance only.
They are in no way to be considered as legally binding.