PNEUMATIC CONTROL VALVES
PV25 (EN)
V25G globe control valves with linear actuators PA series

DESCRIPTION

The PV25 control valves are single seated, two-way body constructed with in-line straight connections. The PA pneumatic actuator is rubber diaphragm and multi-springs. Its action can be DA -direct action (air to close) or RA-reverse action (air to open). The PV25 valves have been designed to assure an accurate control in any process condition. Their wide application ranges allows the use of this valve with the most common process fluids such as water, superheated water, steam, air, gas and other non corrosive fluids (group 1).



MAIN FEATURES

Single seated, two way, direct or reverse action valve.
Valve top flange permanently attached to the body, removal is unnecessary for replacing the actuator.
Metal to metal sealing as standard.

OPTIONS:	Position transmitter 4-20 mA Pneumatic pilot positioner Electropneumatic pilot positioner Air filter regulator Top-work manual handwheel Stainless steel construction. Soft sealing and stellite seat and plug.
USE:	Saturated and superheated steam. Hot and superheated water. Air, gases and other noncorrosive fluids.
AVAILABLE MODELS:	PV25G,PV25S and PV25I
RATINGS:	PN16 and PN40
VALVE SIZES:	DN15 to DN100
CONNECTIONS:	Flanged EN1092-1/-2 PN16 - PN40
ACTUATORS:	PA-205; PA-280; PA-340; PA-435
ACTUATOR CONN:	1/4" NPT-F
CONTROL SIGNAL:	0,2 - 1 bar ; 0,4 - 1,2 bar ; 0,4 - 2 bar.

HOW TO SELECT: Never size the valve according to the pipe diameter in which it has to be fitted but according to the required actual flow of steam or water. Refer to valve calculation data sheet or consult the factory.

MAX. AIR SUPPLY PRESSURE:	3,5 bar
AMBIENT TEMPERATURE:	-20ºC ...+70ºC
BONNET :	From -5ºC to +220ºC (standard) Finned for temperature >220ºC
STEM SEALING:	PTFE/GR V-Rings - up to 220ºC (Standard bonnet) Graphite - up to 400ºC (Finned bonnet) Stainless steel bellows
PLUG CHARACT.:	EQP - Equal percentage PL - Linear PT - On-Off
PORT DESIGN :	Parabolic V-port Perforated low noise
PORT :	Full port as standard Reduced port on request
COMPLEMENTARY INFORMATION :	See IS PV10.00 E

CE MARKING (PED - European Directive 97/23/EC)			
PN 16	**PN 25**	**PN 40**	**Category**
DN15 to DN50	DN15 to DN40	DN15 to DN32	SEP - art. 3, paragraph3
DN65 to DN200	DN50 to DN125	DN40 to DN80	1 (CE Marked)
DN250 to DN300	DN150 to DN200	DN100 to DN125	2(CE Marked)

We reserve the right to change the design and material of this product without notice.

VALVE BODY LIMITING CONDITIONS							
V25G - PN16 *		V25I - PN16 *		V25S - PN40 *		V25I - PN40 *	
ALLOWABLE PRESSURES	RELATED TEMP.	ALLOWABLE PRESSURES	RELATED TEMP.	ALLOWABLE PRESSURES	RELATED TEMP.	ALLOWABLE PRESSURES	RELATED TEMP.
16 bar	-10/50 ºC	16 bar	-10/50 ºC	40 bar	-10 /50º C	40 bar	-10 /50º C
13,3 bar	200 ºC	13,4 bar	200 ºC	33,3 bar	200 ºC	33,7 bar	200 ºC
12,1 bar	250 ºC	12,7 bar	250 ºC	27,6 bar	300 ºC	29,7 bar	300 ºC
11 bar	300 ºC	11,8 bar	300 ºC	25,7 bar	350 ºC	28,5 bar	350 ºC
10,2	350 ºC	11,4 bar	350 ºC	23,8 bar	400 ºC	27,4 bar	400 ºC

Note: Maximum temperature limited to the valve packing selected. Valves with soft seat , maximum allowable temperature : 200ºC

* Rating according to EN1092-1:2007

MATERIALS			
POS.	*DESIGNATION*	*MATERIAL V25G - V25S*	*MATERIAL V25I*
1	Valve Body	ASTM A216WCB / 1.0619 ; GP240GH / 1.0619	CF8M / 1.4408
2	Bonnet	CF8 / 1.4308	CF8 / 1.4308
3	Actuator (Steel)	S235JRG2 / 1.0038	S235JRG2 / 1.0038
	Actuator (Stainless steel)	AISI304 / 1.4301	AISI304 / 1.4301
4	*Diaphragm	NBR 70	NBR 70
5	Yoke (Steel)	C45E / 1.1191	C45E / 1.1191
	Yoke (Stainless steel)	AISI304 / 1.4301	AISI304 / 1.4301
6	*Valve plug	PTFE/GR ; St.Steel	PTFE/GR ; St.Steel
7	*Standard packing	PTFE/GR	PTFE/GR
8	*Metal bellows	AISI316Ti / 1.4571	AISI316Ti / 1.4571

* Available spare parts

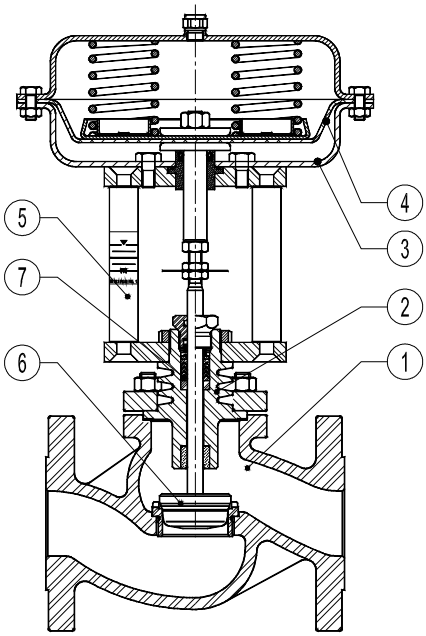

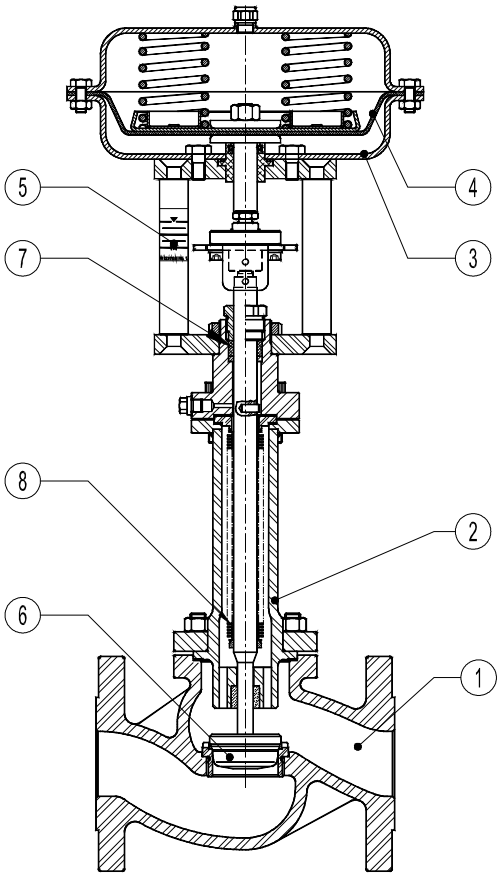



We reserve the right to change the design and material of this product without notice.

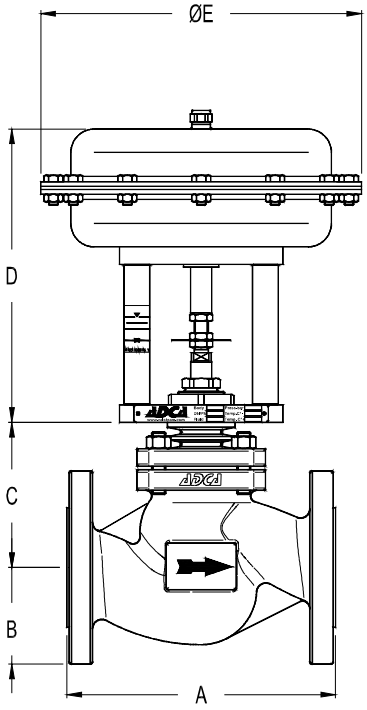

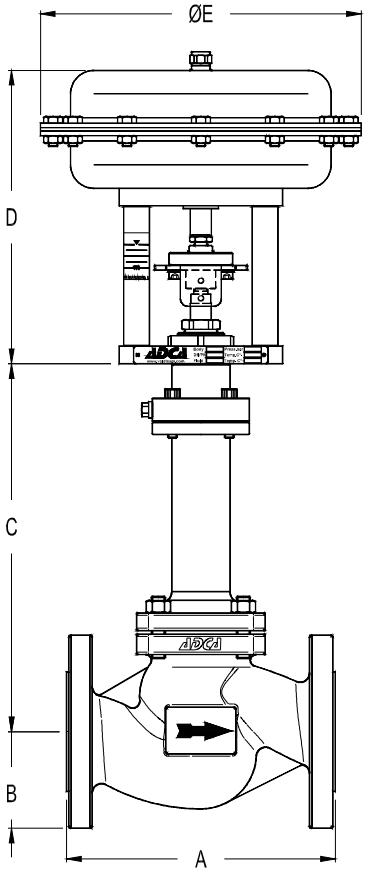

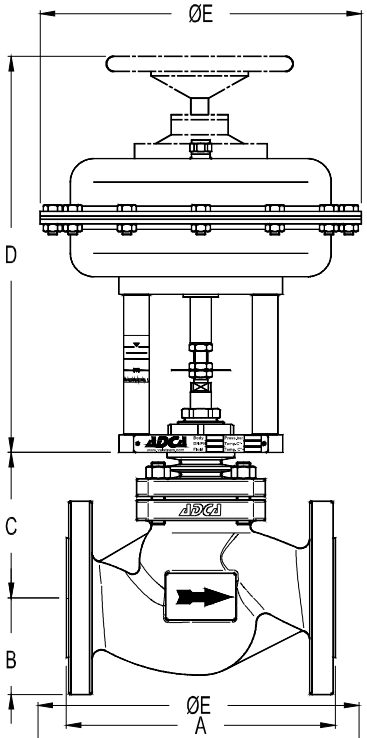

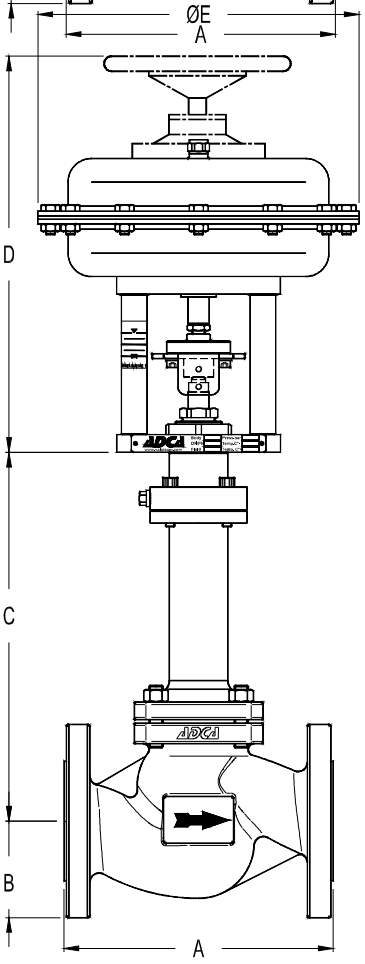

We reserve the right to change the design and material of this product without notice.

DIMENSIONS - VALVE BODY						
DN	A (mm)	B (mm)	C (mm) BONNET			
			STANDARD	FINNED	EXTENDED	BELLOWS
15	130	48	85	150	150	290
20	150	53	85	150	150	290
25	160	58	90	170	170	295
32	180	70	110	190	190	280
40	200	75	115	195	195	285
50	230	83	125	215	215	285
65	290	93	175	275	275	392
80	310	100	175	275	275	392
100	350	118	190	310	310	400

PV25 DA - Direct action from DN15 to DN200, PV25 RA - Reverse action from DN15 to DN100

DIMENSIONS - ACTUATOR			
Type	ø E (mm)	D (mm) DN15-100 DA/RA	WEIGHT Kgs
PA-205	210	235	5,7
PA-280	275	240	8,8
PA-340	335	265	14,3
PA-435	430	295	24,5

FLOW RATE COEFFICIENTS									
	SIZES								
	DN15	DN20	DN25	DN32	DN40	DN50	DN65	DN80	DN100
Kvs	3,8	5,1	9,4	15,4	22,2	40,1	63,4	89,7	136,7

Kvs in m3/h , see data sheet IS PV10.00 E ; For conversion Kvs = Cv(US) x 0,855

VALVE STROKE IN mm									
	SIZES								
	DN15	DN20	DN25	DN32	DN40	DN50	DN65	DN80	DN100
Stroke	20	20	20	20	20	20	30	30	30

Perforated plug and on-off valves may have different strokes, please see literature or consult factory.

We reserve the right to change the design and material of this product without notice.

MAX. PERM.PRESS.DROP IN bar - N.C.(fluid to open) -Reverse action actuator (air signal to open)										
ACTUATOR	CONTROL SIGNAL	SIZES								
		DN15	DN20	DN25	DN32	DN40	DN50	DN65	DN80	DN100
PA-205	0,2 ÷ 1 bar	6	6	5	—	—	—	—	—	—
	0,4 ÷ 1,2 bar	10	10	7	—	—	—	—	—	—
	0,4 ÷ 2 bar	12	12	9	—	—	—	—	—	—
PA-280	0,2 ÷ 1 bar	28	26	16	8	6	3,5	—	—	—
	0,4 ÷ 1,2 bar	40	38	20	12	10	5	—	—	—
	0,4 ÷ 2 bar	50	45	25	16	12	6,5	—	—	—
PA-340A	0,2 ÷ 1 bar	60	60	50	20	12	10	—	—	—
	0,4 ÷ 1,2 bar	80	80	60	30	16	13	—	—	—
	0,4 ÷ 2 bar	100	100	80	40	20	18	—	—	—
PA-340B	0,2 ÷ 1 bar	—	—	—	—	—	—	4	2,5	1
	0,4 ÷ 1,2 bar	—	—	—	—	—	—	5	3,5	1,5
	0,4 ÷ 2 bar	—	—	—	—	—	—	6	4	2
PA435A	0,2 ÷ 1 bar	—	—	—	—	40	25	—	—	—
	0,4 ÷ 1,2 bar	—	—	—	—	48	30	—	—	—
	0,4 ÷ 2 bar	—	—	—	—	55	45	—	—	—
PA435B	0,2 ÷ 1 bar	—	—	—	—	—	—	6	5	3
	0,4 ÷ 1,2 bar	—	—	—	—	—	—	8	7	5
	0,4 ÷ 2 bar	—	—	—	—	—	—	10	8	6
	0,4 ÷ 2,5 bar	—	—	—	—	—	—	16	15	12

* For valve size DN125 and above please consult catalogue IS PV25G.125 E.
The pressure drop values are referred to closed valves. They have been verified by a control signal coming from an electro-pneumatic converter with an enduring minimum signal of 0,2 bar.
The actuator press. drops given with closed valve for the actuator signal 0,4 - 2 bar are also valid for ON-OFF service with air supply at 2,5 bar.
Special spring drops available on request.
The pressure drop values must be used within the body rating limits.
For electric actuator selection please consult catalogue IS EL.20.00 E or our technical department.
If higher differential pressures are required please consult PA45 pneumatic actuators catalogue.

MAX. PERM.PRESS.DROP IN bar - N.O.(fluid to open) -Direct action actuator (air signal to close)										
ACTUATOR	CONTROL SIGNAL	SIZES								
		DN15	DN20	DN25	DN32	DN40	DN50	DN65	DN80	DN100
PA-205	0,2 ÷ 1 bar	16	16	12	5	—	—	—	—	—
	0,4 ÷ 2 bar	25	24	16	7,5	—	—	—	—	—
PA-280	0,2 ÷ 1 bar	—	—	19	10	8	4	—	—	—
	0,4 ÷ 2 bar	—	—	25	20	16	7	—	—	—
PA-340A	0,2 ÷ 1 bar	—	—	—	17	16	10	—	—	—
	0,4 ÷ 2 bar	—	—	—	28	26	25	—	—	—
PA-340B	0,2 ÷ 1 bar	—	—	—	—	—	—	5	3,5	1,5
	0,4 ÷ 2 bar	—	—	—	—	—	—	8	7	3
PA435B	0,2 ÷ 1 bar	—	—	—	—	—	—	8	5	3
	0,4 ÷ 2 bar	—	—	—	—	—	—	16	10	7,5

* For valve size DN125 and above please consult.
The actuator pressure drops given with closed valve, are obtained with the following air pressures supply:
Actuator signal 0,2 to 1 bar :air supply 1,2 bar ; Actuator signal 0,4 to 2 bar : air supply 2,5 bar
The actuator press. drops given with closed valve for the actuator signal 0,4- 2 bar are also valid for ON-OFF service with air supply at 2,5 bar.
Special spring drops available on request.
The pressure drop values must be used within the body rating limits.
For electric actuator selection please consult catalogue IS EL.20.00 E or our technical department.

We reserve the right to change the design and material of this product without notice.

ORDERING CODES V25

VALVE CODES		V	.25 G						.X.	
Actuator Type (1)										
Pneumatic Actuator	P									
Electric Actuator	E									
Group Designation										
Globe valve, two way, straight body		V								
Valve Model										
ASTM A216 WCB body, stainless steel trim			.25 G							
ASTM A216 WCB body, stainless steel trim			.25 S							
CF8M body, stainless steel trim			.25 I							
Stem Sealing										
PTFE/GR-V-Rings / Standard bonnet					1					
Virgin PTFE V-Rings / Standard bonnet					2					
Graphite / Standard bonnet					3					
Graphite / Finned bonnet					4					
Bellows					8					
Valve Plug										
EQP (equal percentage) - Soft (PTFE-GR)						1				
EQP (equal percentage) - Metal AISI316 / 1.4401						3				
EQP (equal percentage) - Stellite						4				
PL (linear) - Soft (PTFE/GR)						6				
PL (linear) - Metal AISI316 / 1.4401						7				
PT (on-off) - Soft (PTFE/GR)						9				
PT (on-off) - Metal AISI316 / 1.4401						10				
Pipe Connection										
Flanged EN1092-2 PN16							L			
Flanged EN1092-1 PN40							N			
Size										
DN15								15		
DN20								20		
…										
Actuator									(1)	
Extras (3)										E

ACTUATOR CODES (pneumatic)	P.				
Group Designation					
Multi-spring , pneumatic linear actuator	P.				
Actuator Size					
205		1			
280		3			
340 A - From DN15 to DN50		5			
340 B - From DN65 to DN100		6			
435 A - From DN15 to DN50		7			
435 B - From DN65 to DN100		8			
Actuator					
Direct Action			D		
Reverse Action			R		
Actuator Construtions					
Steel construction (painted) - standard				(2)	
Stainless steel construction				I	
Control Signal					
0,2 - 1 bar (3/15 psi)					15
0,4 - 1,2 bar (6/18 psi)					18
0,4 - 2 bar (6/30 psi)					30

To be introduced on ".X.", if supplied in combination with the valve.

Example:

V25G valve model EQP soft plug, PTFE/GR stem sealing DN50 complete with reverse action actuator signal 0,4-1,2bar, size340A steel.

Code: PV.25G.11L50.5R18

REMARKS:

(1)- Indicate actuator type.

(2)- Omitted if the standard actuator is selected.

(3)- To be used only when a non-standard combination valve is supplied.

ADCATROL control valves are identified by a serial number on a nameplate, located on the actuator yoke.

Always order spares by using that serial number. If the valve has non-standard extras the serial number has also an E (extras).

We reserve the right to change the design and material of this product without notice.