lumbergautomation
A BELDEN BRAND



Product: RSF 5

M12 Standard Sensor/Actuator Receptacle Connector: Male, front mount, M12 - mating side, solder contacts - connecting side, 5-pin, A-coded, unshielded, metallic grey housing, 50 V AC / 60 V DC, 4 A

Product Description

M12 Standard Sensor/Actuator Receptacle Connector: Male, front mount, M12 - mating side, solder contacts - connecting side, 5-pin, A-coded, unshielded, metallic grey housing, 50 V AC / 60 V DC, 4 A

Technical Drawing

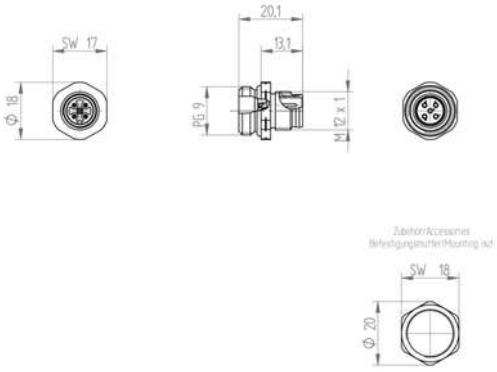

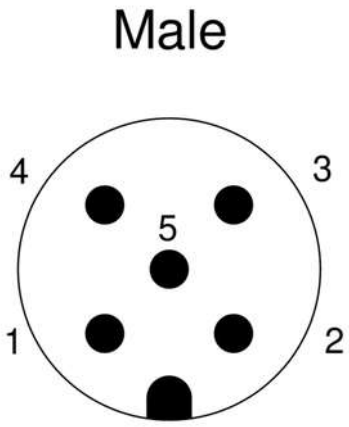

Technical Specifications

Technical Data

Product Family:	Sensor / Actuator Connectors
Product Sub Family:	M12 Standard
Mating Side:	M12
Connecting Side:	Solder Contacts
Brand:	Lumberg Automation
Connector Type:	Receptacle
Type of Contact / Gender:	Male
Connector Design:	Front Mount
Number of Pins:	5
Coding:	A
Attachment Type:	Screw-Locking
Rated Voltage:	60 V
Rated Voltage (UL):	30 V AC/DC
Rated Impulse Voltage:	1.5 kV
Operating Voltage:	50 V AC / 60 V DC
Rated Current*:	4 A
Rated Current (UL)*:	AWG 22&24: 4 A; AWG 26: 2 A
Contact Resistance:	≤ 10 mOhm
Insulation Resistance:	> 10^9 Ohm

Mating Cycles:	≤ 100
Type of Connection:	Solder
Thread Size:	PG9
Suitable Conductor Cross Section:	Solid wires: 0.22 mm² to 0.75 mm² / Standed wires: 0.22 mm² to 0.5 mm²
Ambient Temperature (Operation)*:	- 25 °C - + 85 °C
Operating Temperature (UL):	max. + 50 °C
Protection Degree / IP Rating**:	IP65, IP67
Design Standard:	IEC 61076-2-101
Pollution Degree:	3 acc. to DIN EN 60664-1 (VDE 0110-1)
Clearance / Creepage Distance:	DIN EN 60664-1 (2008/01); VDE 0110-1
Overvoltage Category:	III acc. to DIN EN 60664-1 (VDE 0110-1)

Materials

Contact Base Material:	CuZn
Contact Plating:	Cu/Au
Contact Bearer Material:	PA
Contact Bearer Color:	Black
Flammability Class (Contact Bearer):	UL 94 V-0
Potted:	No
Housing Material:	CuZn
Housing Plating:	Nickel-plated
Housing Color:	Silver
Attachment Material:	CuZn
Attachment Plating:	Nickel-plated
O-Ring Material:	FKM

Additional Technical Data

Fastening Torque (Attachment):	M 12x1: (50-60) Ncm, hand-tight
Accessories to Order Separately:	000-011-645 Mounting Nut PG9

Approvals

UL-File:	E315587
UL:	cURus

Safety & Environmental Compliance

RoHS Compliant:	yes

Notes

Note Derating:	* Notice derating
Protection Degree / IP Rating Note:	* only if mounted and locked in combination with Hirschmann / Lumberg connector. On the installation side tightness has to be assured by taking proper measures.
Note:	The receptacle connector is constructively intended for usage in IP67-products. To realise this protection class, the estimated location has to be designed accordingly. Further details see IEC 61076-2-101. Connection area must be epoxy potted.
UL Note:	The receptacle connector is constructively intended for usage in IP67-products. To realise this protection class, the estimated location has to be designed accordingly. Further details see IEC 61076-2-101

Variants

Item #	Item Description	Rated Current	Housing Color	Housing Material	Contact Bearer Color
11632	RSF 5	4 A	Silver	CuZn	Black

© 2022 Belden, Inc

All Rights Reserved.

Although Belden makes every reasonable effort to ensure their accuracy at the time of this publication, information and specifications described here in are subject to error or omission and to change without notice, and the listing of such information and specifications does not ensure product availability.

Belden provides the information and specifications herein on an "ASIS" basis, with no representations or warranties, whether express, statutory or implied. In no event will Belden be liable for any damages (including consequential, indirect, incidental, special, punitive, or exemplary damages) whatsoever, even if Belden has been advised of the possibility of such damages, whether in an action under contract, negligence or any other theory, arising out of or in connection with the use, or inability to use, the information or specifications described herein.

All sales of Belden products are subject to Belden's standard terms and conditions of sale.

Belden believes this product to be in compliance with all applicable environmental programs as listed in the data sheet. The information provided is correct to the best of Belden's knowledge, information and belief

at the date of its publication. This information is designed only as a general guide for the safe handling, storage, and any other operation of the product itself or the one that it becomes a part of. The Product Disclosure is not to be considered a warranty or quality specification. Regulatory information is for guidance purposes only. Product users are responsible for determining the applicability of legislation and regulations based on their individual usage of the product.