O6S305

Through-beam sensor transmitter

O6S-OOKG/AS/4P

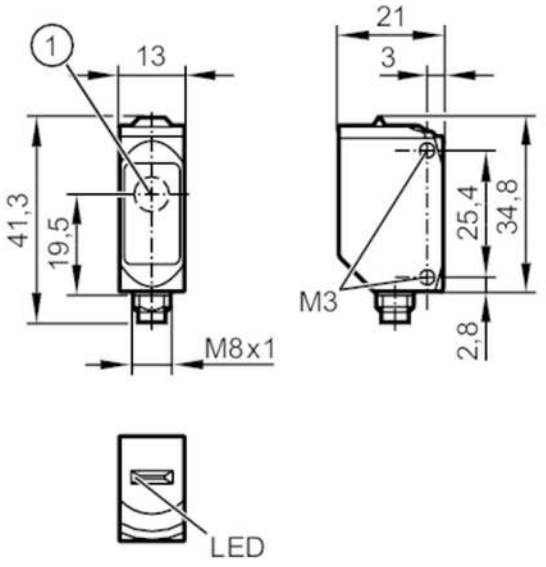

1: light emission

Product characteristics		
Type of light		red light
Housing		rectangular
Application		
Function principle		Through-beam sensor
Electrical data		
Operating voltage	[V]	10...30 DC
Current consumption	[mA]	11; ((24 V))
Protection class		III
Type of light		red light
Wave length	[nm]	633
Detection zone		
Transmitter / receiver		transmitter
Range	[m]	< 10
Max. light spot diameter	[mm]	300
Light spot dimensions refer to		at maximum range
Interfaces		
Communication interface		IO-Link
Transmission type		COM2 (38,4 kBaud)
IO-Link revision		1.1
SDCI standard		IEC 61131-9
Profiles		Smart Sensor: Device Identification
SIO mode		yes
Required master port type		A
Min. process cycle time	[ms]	2.5

O6S305

Through-beam sensor transmitter

O6S-OOKG/AS/4P

IO-Link process data (cyclical)		**function**	**bit length**
		process value	8
IO-Link functions (acyclical)		application specific tag; operating hours counter; switching cycles counter	
Supported DeviceIDs		**Type of operation**	**DeviceID**
		default	420
Operating conditions			
Ambient temperature	[°C]	-25...80	
Protection		IP 65; IP 67; IP 68; IP 69K	
Tests / approvals			
EMC		EN 60947-5-2	
MTTF	[years]	1239	
UL approval		UL Approval no.	E011
Mechanical data			
Weight	[g]	33.8	
Housing		rectangular	
Dimensions	[mm]	34.8 x 13 x 21	
Materials		housing: stainless steel (316L/1.4404); plastics: PPSU; Sealing: EPDM	
Lens material		PMMA	
Lens alignment		side lens	
Tightening torque	[Nm]	1; (screws)	
Displays / operating elements			
Display		operation	1 x LED, green
Remarks			
Remarks		operating voltage "supply class 2" according to cULus	
Pack quantity		1 pcs.	
Electrical connection			

Connector: 1 x M8; coding: A

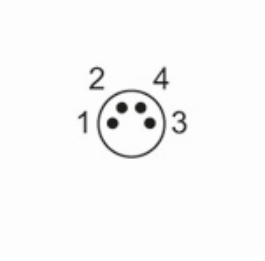

O6S305

Through-beam sensor transmitter

O6S-OOKG/AS/4P

Connection

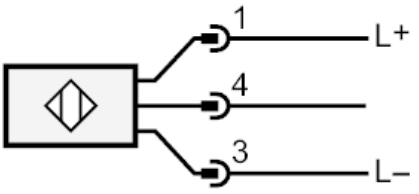

4	IO-Link

Diagrams and graphs

excess gain graph

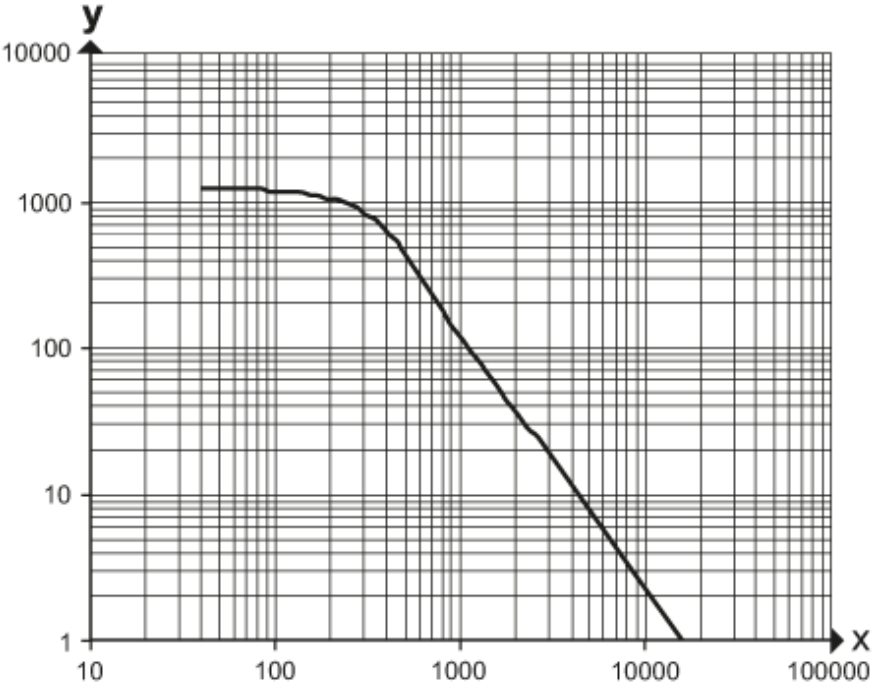

x: distance [mm]

y: excess gain factor