Product Data Sheet

Ref: P1346 Issue: C Date: April 2012

UNISTRUT® atkore INTERNATIONAL

P1346 ANGLE FITTING

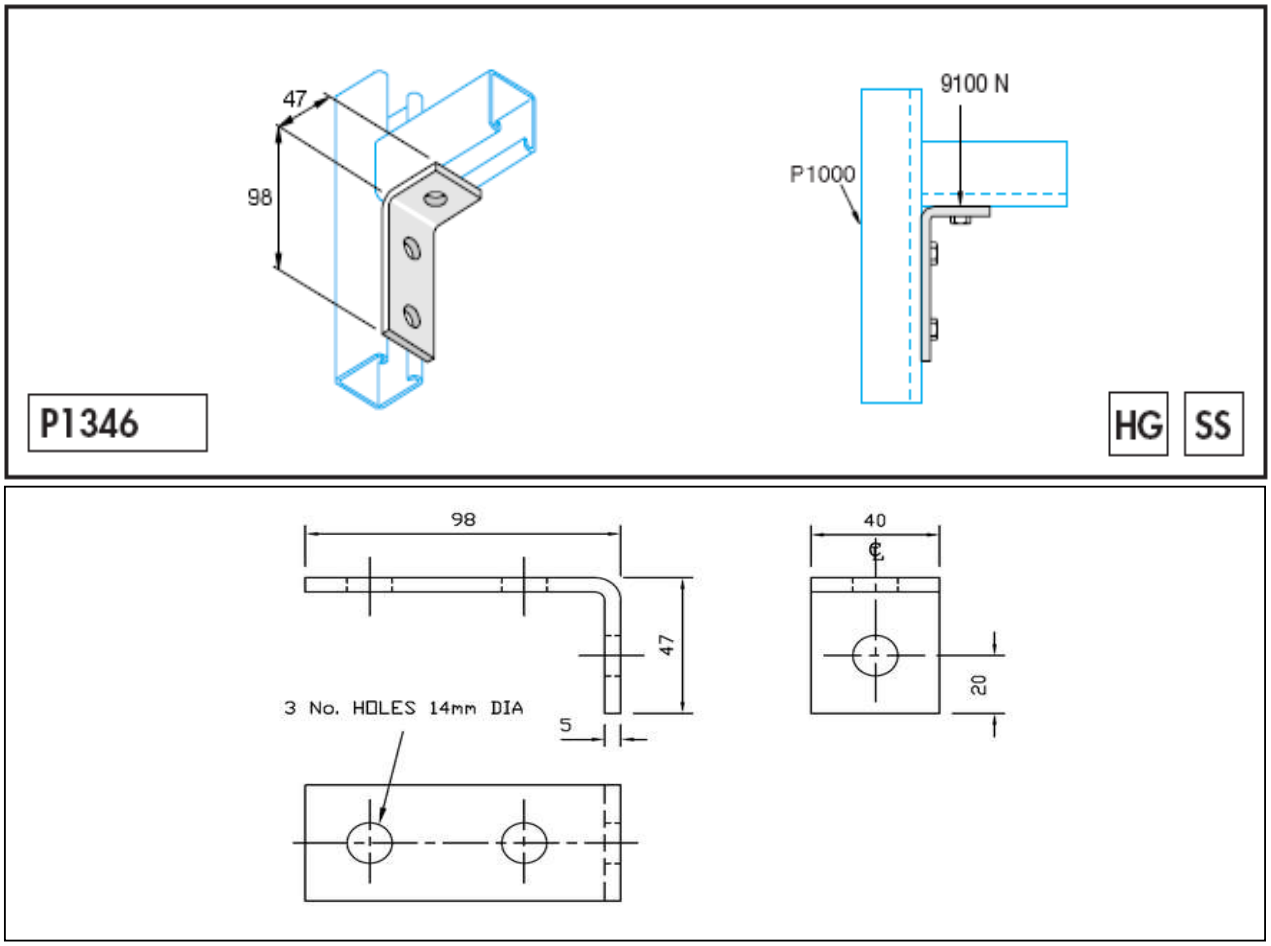

Material: Mild Steel to BS EN 10149-2-S315MC or Q345
Stainless Steel to BS EN 10088-2-1.4404+1D (S316)

Fixings:- All 14mm diameter holes use M12 grade 8.8 hex head screws with M12 BSEN 10025 S275 or Q235 Channel Nuts.

Finishes: Hot Dip Galvanized - Process in accordance with BS EN ISO 1461 to a mean coating thickness (minimum) of 55µm.
Stainless Steel -

Application: Drawing illustrates only one application for the fitting. In most cases many other applications are possible.
The channels shown in the application are P1000,41mm square, except where otherwise noted.
Loading data varies due to specific application, for all queries contact Unistrut UK.

Part Weight:- 0.195Kg
Box Weight: 3.9Kg
No. Per Box; 20

UNISTRUT HEALTH & SAFETY DATA SHEET REF'S :

No. 001 - PLAIN STEEL, PRE-GALVANIZED, GALVANIZED AND STAINLESS STEEL COMPONENTS
No. 099 - HOT DIP GALVANIZING (CHANNEL & COMPONENTS)
No. 102 - STEEL

BS EN ISO 9001 Cert. FM825