8ECR0001.1121C-0

1 General information

- Can be used in cable drag chains
- Assembled specifically for use with ACOPOS P3 servo drives and B&R servo motors with series 615 built-in connectors
- itec - Innovative connector system for fast and secure connections

2 Order data

Order number	Short description	Figure
	Resolver cables - SpringTec connector	
8ECR0001.1121C-0	ACOPOS P3 resolver cable, length 1 m, 3x 2x 24 AWG (19x 0.127), 12-pin female series 615 signal connector, 8-pin male Mini I/O connector, can be used in cable drag chains	

Table 1: 8ECR0001.1121C-0 - Order data

3 Technical data

Order number	8ECR0001.1121C-0
General information	
Cable cross section	3x 2x 24 19 AWG
Durability	Oil resistance per VDE 0472 Part 803 as well as standard hydraulic oils [1)]
Certification	UL AWM style 20671, 90°C, 30 V, E63216 and CSA AWM, 90°C, 30 V, I/II A/B FT1 LL46064 [1)]
Certifications	
CE	Yes
UKCA	Yes
Cable construction	
Signal line	
Quantity	6
Wire insulation	Special thermoplastic material
Wire colors	White/Brown, green/yellow, gray/pink
Variant	Tinned copper stranded wire
Cross section	24 AWG / 19 AWG
Shield	No
Stranding	White with brown, green with yellow, gray with pink
Cable stranding	The 3 pairs together covered by foil shield
Cable shield	Copper braiding, optical coverage ≥90% and foil shield
Outer jacket	
Material	PUR
Color	Green, similar to RAL 6018 flat
Labeling	B&R 3x2x24 AWG FLEX UL AWM STYLE 20671 90°C 30 V E63216 CSA AWM 90°C 30 V I/II A/B FT1 LL46064 [1)]
Connector	
Type	12-pin female series 615 signal connector
Mating cycles	<500
Contacts	12
Additional connectors	8-pin female Mini I/O encoder connector Mating cycles: <1500 Contacts: 8 Degree of protection per EN 60529: IP30 when connected
Degree of protection per EN 60529	IP66/67 when connected
Electrical properties [1)]	
Operating voltage	≤30 V_{eff}
Test voltage	
Wire - Wire	1.5 kV
Wire - Shield	0.8 kV
Conductor resistance	
Signal line	≤86 Ω/km
Insulation resistance	>200 MΩ*km

Table 2: 8ECR0001.1121C-0 - Technical data

Order number	8ECR0001.1121C-0
Ambient conditions [1]	
Temperature	
Moving	-20°C to +80°C
Static	-20°C to +90°C
Mechanical properties [1]	
Dimensions	
Length	1 m
Diameter	6.5 mm ±0.2 mm
Bend radius	
Single bend	≥20 mm
Moving	≥50 mm
Drag chain data	
Acceleration	≤6 g
Flex cycles [2]	>3,000,000
Velocity	≤4 m/s
Weight	0.07 kg

Table 2: 8ECR0001.1121C-0 - Technical data

1) Values refer to the raw cable being used.
2) At an ambient temperature of 20°C and bend radius of 65 mm.

4 Wiring

4.1 Cable construction

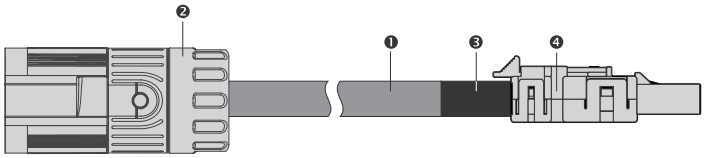

Pos.	Description	Note
1	Encoder line	3 x 2 x 24 AWG/19
2	12-pin female circular connector Coding contact	
3	Heat shrink tubing	
4	Mini I/O encoder connector	

Table 3: ESTB resolver cables - Cable construction

4.2 Pinout

Circular connector	Pin	Description	Function	Pin	Mini I/O connector
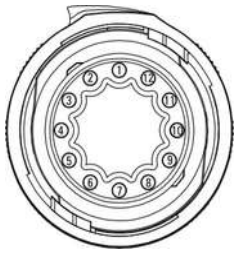	1	---	**Coding contact!**	---	
	2	---		---	
	3	---		---	
	4	---		---	
	5	---		---	
	6	R1	Reference output inverted	4	
	7	---		---	
	8	S4	Sine input +	3	
	9	S2	Sine input -	1	
	10	S3	Cosine input +	5	
	11	S1	Cosine input -	7	
	12	R2	Reference output	2	

Table 4: ESTB resolver cables - Pinout

4.3 Cable diagram

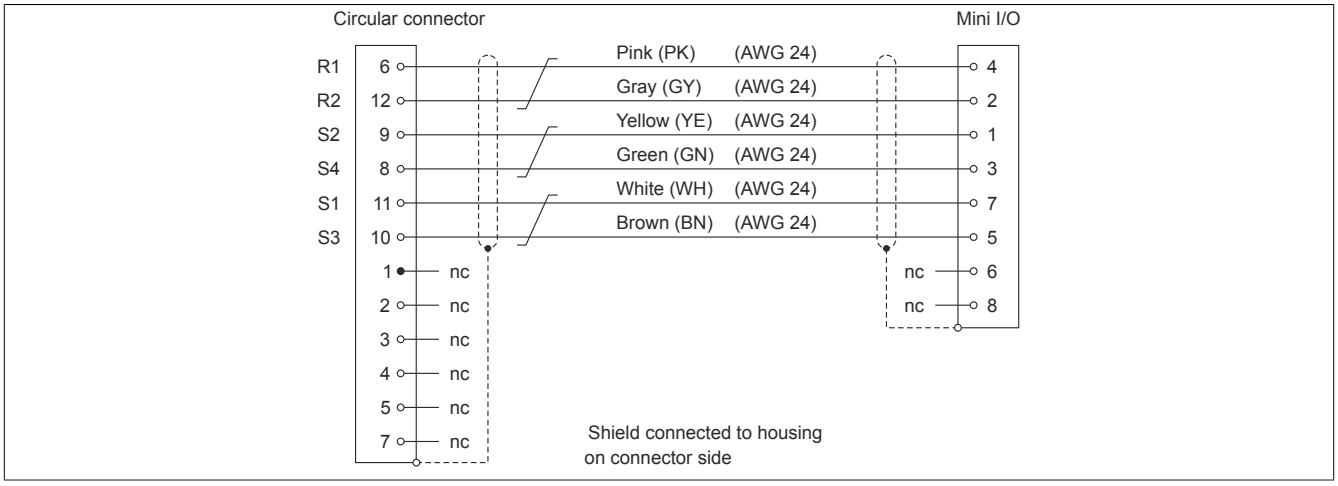

Figure 1: ESTB resolver cables - Cable diagram