Mechanical Protection

BAM CS-XA-001-M8-C
Order Code: BAM01C1

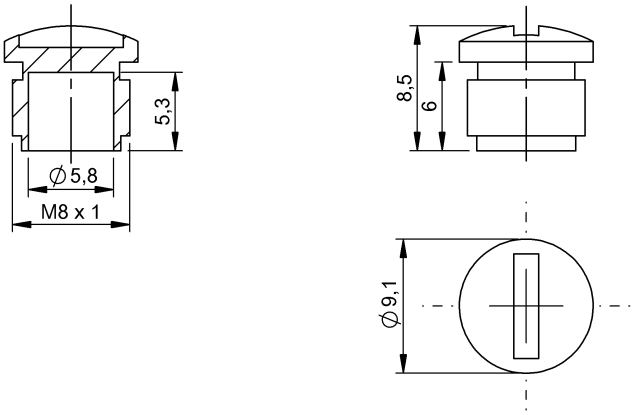

Basic features

Scope of delivery	Protective cover
Short description	Protective nut
Use	for junction blocks M8

Material

Housing material	PC ABS

Mechanical data

Dimension	Ø 9.1 x 8.5 mm
Installation	for flush mounting
Mounting part	Threads
Tightening torque	1.5 Nm