EBT006

Y-splitter

ZDO2H030VAS0000-00STGH040VAS

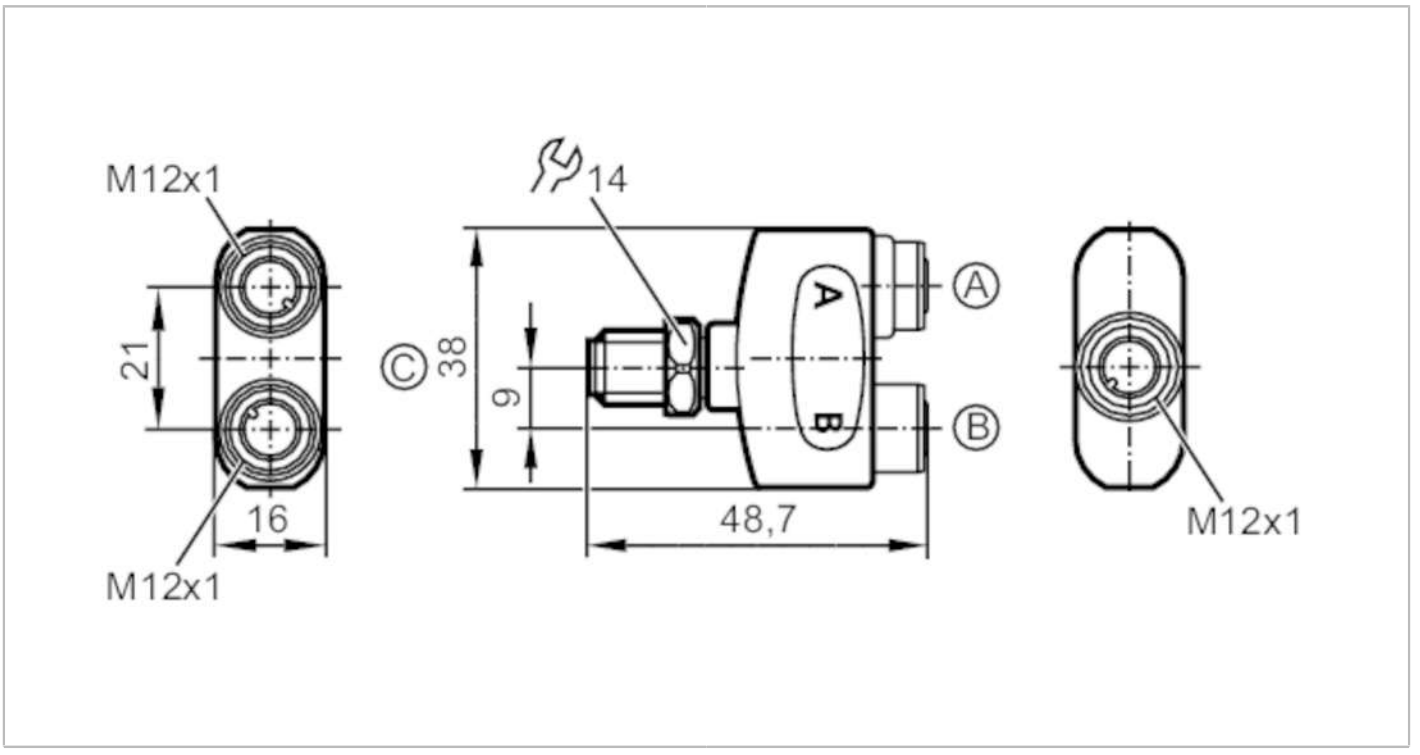

CE

Application		
Free from silicone		yes
Electrical data		
Operating voltage	[V]	< 250 AC / < 300 DC
Protection class		II
Max. current load per module/slot	[A]	4
Max. current load total	[A]	4
Operating conditions		
Ambient temperature	[°C]	-25...100
Protection		IP 65; IP 67; IP 68; IP 69K
Mechanical data		
Weight	[g]	35
Materials		housing: PA orange; Sealing: EPDM
Material nut		stainless steel (1.4404 / 316L) / stainless steel (1.4404 / 316L)
Remarks		
Pack quantity		1 pcs.
Electrical connection - socket		

Connector: 2 x M12; Locking: , stainless steel (1.4404 / 316L); Kontakte: gold-plated; Tightening torque: 0.6...1.5

EBT006

Y-splitter

ZDO2H030VAS0000-00STGH040VAS



Electrical connection - plug

Connector: 1 x M12; Locking: , stainless steel (1.4404 / 316L); Kontakte: gold-plated; Tightening torque: 0.6...1.5

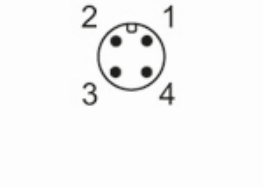

Connection

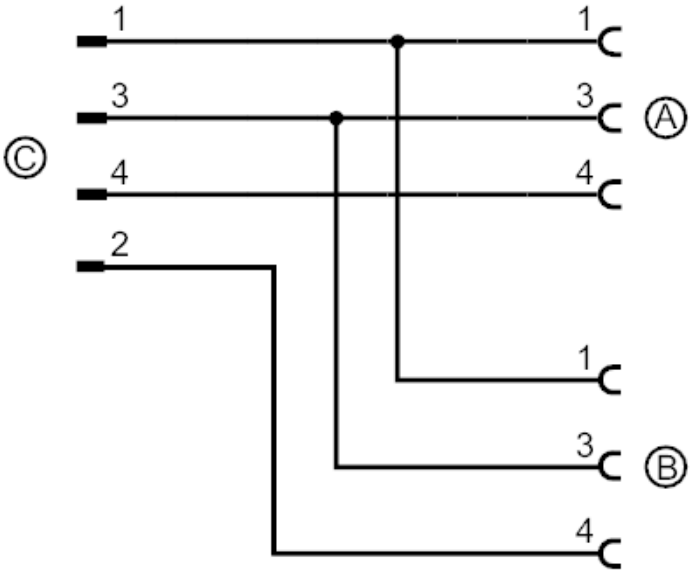

connection to IEC 61076-2-101