



Dimensions

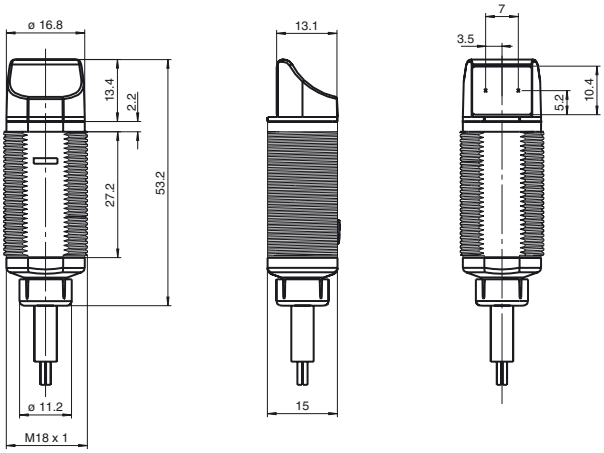

Model Number

GLV18-6-S/59/102/115

Retro-reflective sensor
with 2 m fixed cable

Features

- Short design in M18 plastic housing
- Optical face lateral
- 4 LEDs indicator for 360° all-round visibility
- Optimal price/power ratio

Electrical connection

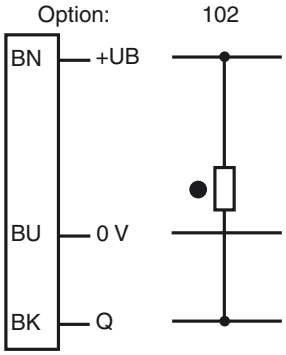

○ = Light on
● = Dark on

Suitable reflectors and cable sockets can be found in the Internet

Release date: 2008-01-30 Date of issue: 2008-01-30 190535_ENG.xml

Subject to reasonable modifications due to technical advances. Copyright Pepperl+Fuchs, Printed in Germany

Technical data

General specifications		
Effective detection range		0 ... 5.5 m
Reflector distance		0.05 ... 5.5 m
Threshold detection range		6.5 m with reflector C110-2
Light source		LED, red 640 nm
Approvals		CE, cULus Listed 57M3 (Only in association with UL Class 2 power supply)
Reference target		reflector C110-2
Light type		red, modulated light
Diameter of the light spot		approx. 250 mm at 6.5 m
Angle of divergence		approx. 2 °
Optical face		lateral
Ambient light limit		30000 Lux
Indicators/operating means		
Operating display		green LED, statically lit Power on
Function display		LED yellow: lights up, when receiving the light beam ; flashes when falling short of the stability control; OFF when light beam is interrupted
Electrical specifications		
Operating voltage		10 ... 30 V DC
Protection class		II, rated insulation voltage ¡Ü 250 V AC with degree of pollution 1-2 according to IEC 60664-1
No-load supply current	I_0	< 20 mA
Output		
Switching type		dark ON
Signal output		1 npn, short-circuit proof, open collector
Switching voltage		max. 30 V DC
Switching current		max. 100 mA
Voltage drop	U_d	≤ 1.5 V DC
Switching frequency	f	500 Hz
Response time		≤ 1 ms
Standard conformity		
Standards		EN 60947-5-2
Ambient conditions		
Ambient temperature		-25 ... 60 °C (248 ... 333 K)
Storage temperature		-40 ... 70 °C (233 ... 343 K)
Mechanical specifications		
Protection degree		IP67
Connection		fixed cable 2 m
Material		
Housing		PC
Optical face		PMMA
Mass		< 100 g

Characteristic response curve

GLV18-6-S...

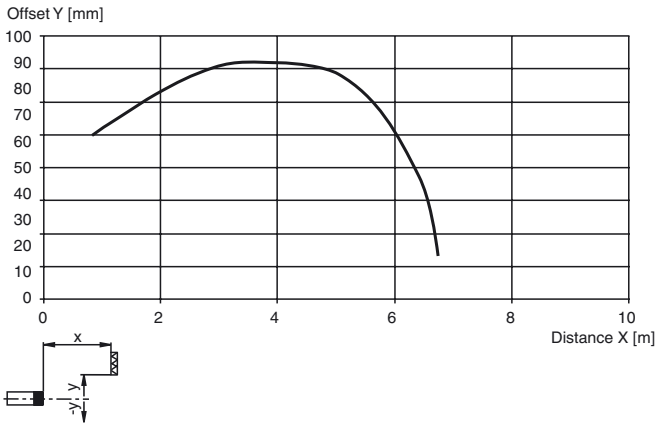

Release date: 2008-01-30 09:27 Date of issue: 2008-01-30 190535_ENG.xml

Subject to reasonable modifications due to technical advances. Copyright Pepperl+Fuchs, Printed in Germany

Relative received light strength

GLV18-6-S...

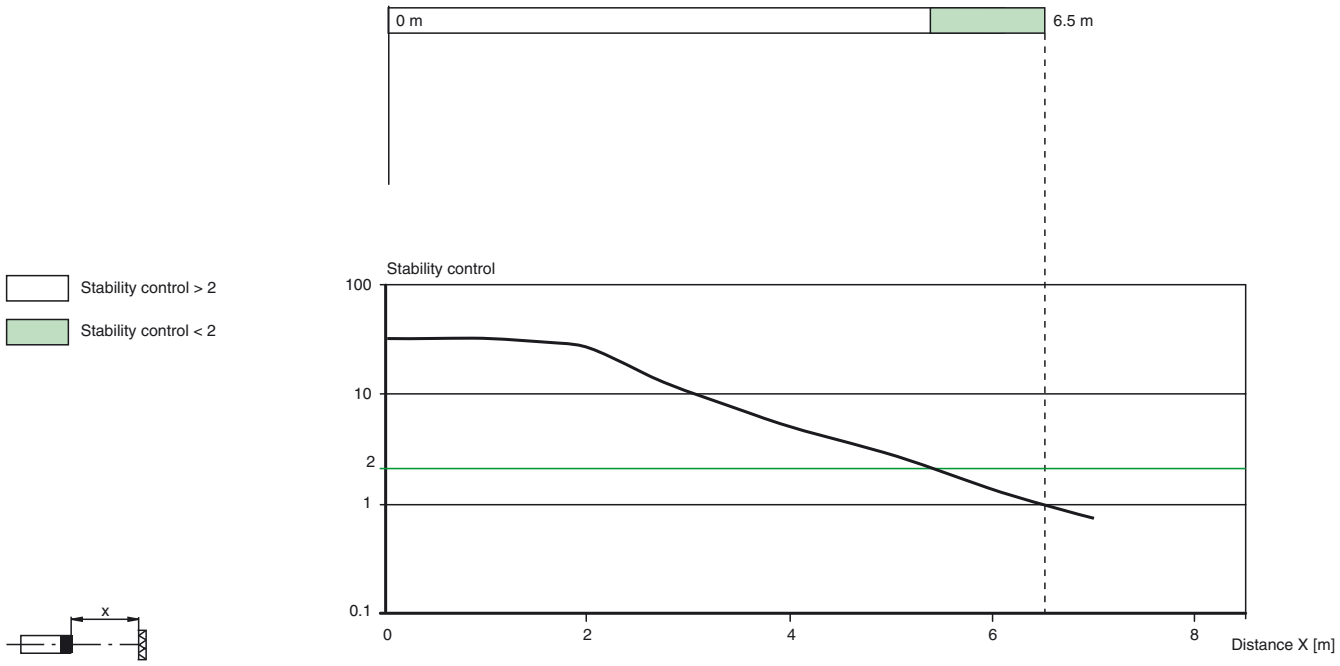

Release date: 2008-01-30 09:27 Date of issue: 2008-01-30 190535_ENG.xml

Subject to reasonable modifications due to technical advances. Copyright Pepperl+Fuchs, Printed in Germany