E30006

Protective cover for process sensors

PROTECTIVE COVER 2

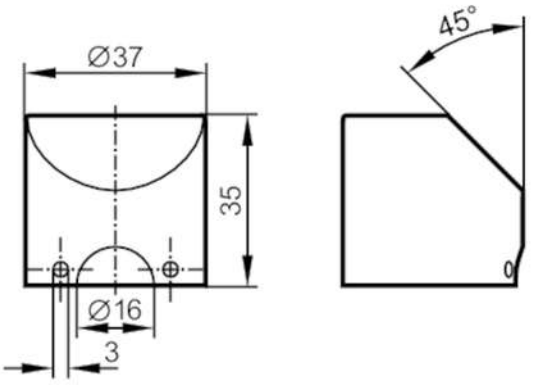

Application		
Design		for fluid sensors with connector M12
Mechanical data		
Weight	[g]	7.15
Materials		TPE-U
Remarks		
Pack quantity		1 pcs.