E30079

3-way mounting device for process sensors

MOUNTIG DEVICE 3 WAY

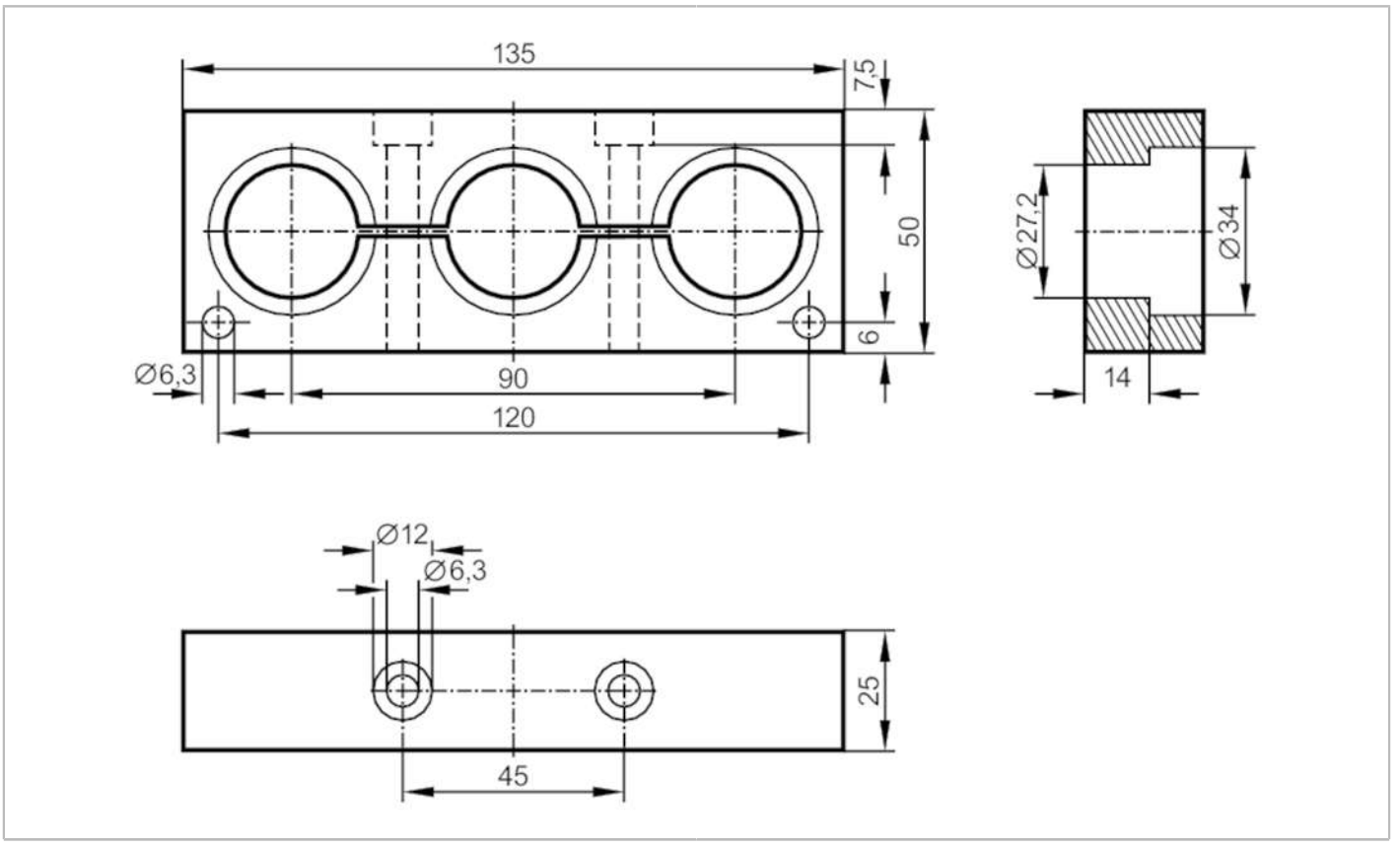

Application		
Design		for fluid sensors
Mechanical data		
Weight	[g]	180
Materials		POM
Accessories		
Items supplied		cylinder screws: 2 x M6 x 60, ISO 4762
Remarks		
Pack quantity		1 pcs.