MICRO-CHANGE '8R' SERIES MALE/MALE RECEPTACLE - PG9

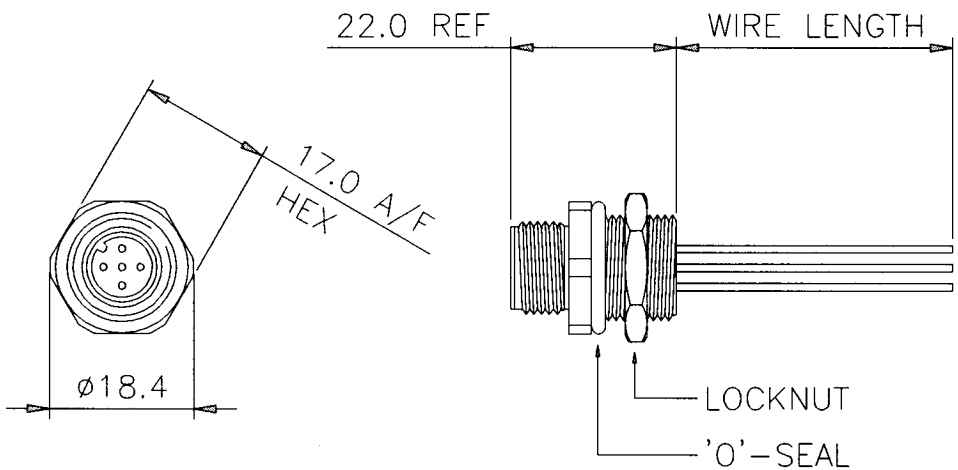

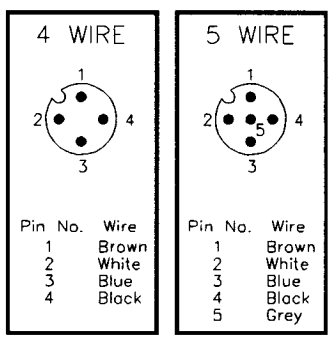

PART No MATRIX

8	0	X	J	3	6	X	X	X	X	X	X	X	X
													OPTIONS

- 8 = 8=Micro Change
- 0 = R=Receptacle
- X = 4=4 Core, 5=5 Core
- J36 = Male/Male PG9 (Long)
- X X X = See table of cable types
- X = C=Centimetres, M=Metres, F=Feet
- X X X = LENGTH: 020=2 METRES, 050=5 METRES, 200=20 METRES
- X = Shell Material: 3=Nickel plated Brass (Standard), 1=Stainless Steel, 5=Delrin

THIS DRAWING CONTAINS INFORMATION THAT IS PROPRIETARY TO AERO-MOTIVE (UK) LTD. AND NOT BE USED WITHOUT WRITTEN PERMISSION.

AERO-MOTIVE(UK)LTD
FACTORY 9 RASSAU IND. EST.
EBBW VALE GWENT NP35SD

REV.	DRAWN
A	T.Davies
DATE	
24/9/97	

BRADHARRISON®
From Aero-Motive (UK) Limited

Part No 8RXJ36XXXXXX