

## Model Number

**NCB50-FP-E2-P1**

## Features

- **50 mm flush**
- **3-wire DC**

## Connection

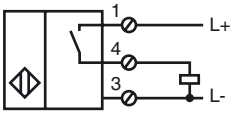


## Dimensions

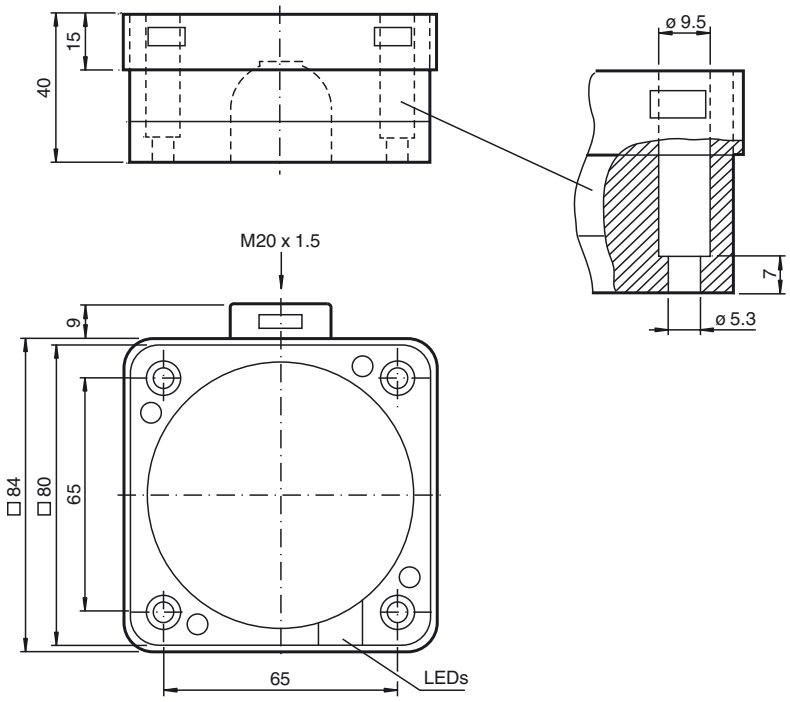


## Technical Data

| | | |
|---|---|---|
| **General specifications** | | |
| Switching element function | | PNP NO contact |
| Rated operating distance | $s_n$ | 50 mm |
| Installation | | flush |
| Output polarity | | DC |
| Assured operating distance | $s_a$ | 0 ... 40.5 mm |
| Reduction factor $r_{Al}$ | | 0.38 |
| Reduction factor $r_{Cu}$ | | 0.35 |
| Reduction factor $r_{304}$ | | 0.83 |
| **Nominal ratings** | | |
| Operating voltage | $U_B$ | 10 ... 60 V DC |
| Switching frequency | f | 0 ... 80 Hz |
| Hysteresis | H | typ. 3 % |
| Reverse polarity protection | | reverse polarity protected |
| Short-circuit protection | | pulsing |
| Voltage drop | $U_d$ | ≤ 3 V |
| Operating current | $I_L$ | 0 ... 200 mA |
| Off-state current | $I_r$ | 0 ... 0.5 mA |
| No-load supply current | $I_0$ | ≤ 20 mA |
| Time delay before availability | $t_v$ | ≤ 300 ms |
| Operating voltage display | | LED, green |
| Switching state indication | | LED, yellow |
| **Functional safety related parameters** | | |
| $MTTF_d$ | | 940 a |
| Mission Time ($T_M$) | | 20 a |
| Diagnostic Coverage (DC) | | 0 % |
| **Ambient conditions** | | |
| Ambient temperature | | -25 ... 70 °C (-13 ... 158 °F) |
| **Mechanical specifications** | | |
| Connection type | | screw terminals |
| Core cross-section | | up to 2.5 $mm^2$ |
| Housing material | | PBT |
| Sensing face | | PBT |
| Housing base | | PBT |
| Protection degree | | IP68 |
| **Compliance with standards and directives** | | |
| Standard conformity | | |
| Standards | | EN 60947-5-2:2007<br>IEC 60947-5-2:2007 |
| **Approvals and certificates** | | |
| UL approval | | cULus Listed, General Purpose |
| CSA approval | | cCSAus Listed, General Purpose |
| CCC approval | | Certified by China Compulsory Certification (CCC) |

Release date: 2013-04-17 08:51 Date of issue: 2013-04-17 187388_eng.xml

## Installation hint

These sensors are especially designed for embeddable mounting in conveyor floors. Due to its precise location in metal base plates the sensor is afforded a high degree of mechanical protection. No clearance is required between the sensor and the base plate, avoiding the need for protective guarding to prevent possible foot injury.

The large sensing range ensures positive detection, and thus provides consistent control and monitoring of the conveyor.

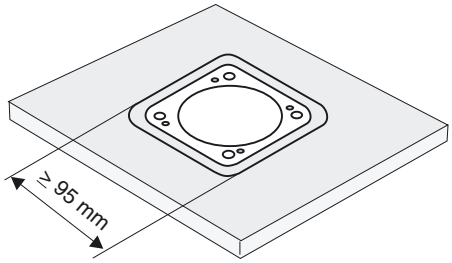


Warning!
Once the metal screening has been removed, the sensor can no longer be embeddable mounted.

Release date: 2013-04-17 08:51 Date of issue: 2013-04-17 187388_eng.xml



Refer to “General Notes Relating to Pepperl+Fuchs Product Information”.
Pepperl+Fuchs Group www.pepperl-fuchs.com
USA: +1 330 486 0001 fa-info@us.pepperl-fuchs.com
Germany: +49 621 776 4411 fa-info@de.pepperl-fuchs.com
Singapore: +65 6779 9091 fa-info@sg.pepperl-fuchs.com
PEPPERL+FUCHS SENSING YOUR NEEDS