KI533A

Capacitive sensor

KIE4150NCPKG/US/IO/3D

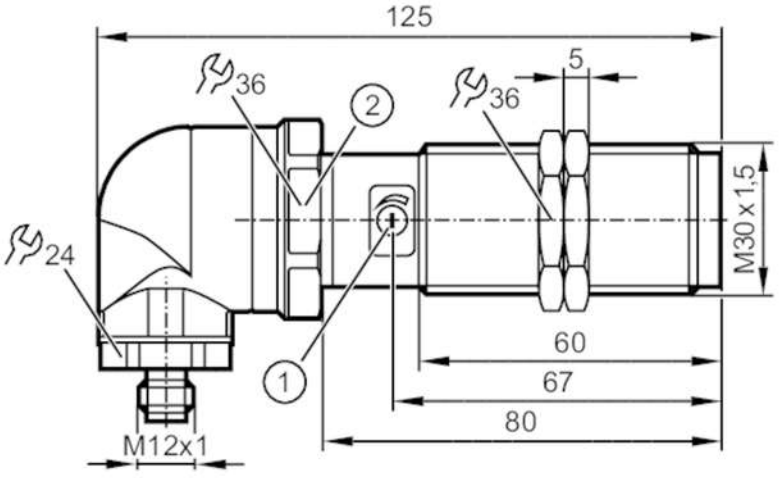

1 potentiometer
2 Tightening torque 10 Nm

Product characteristics		
Electrical design		PNP
Output function		complementary
Sensing range	[mm]	3...26
Communication interface		IO-Link
Housing		threaded type
Dimensions	[mm]	M30 x 1.5 / L = 150
Electrical data		
Operating voltage	[V]	10...30 DC
Rated insulation voltage	[V]	60
Current consumption	[mA]	< 22
Protection class		III
Reverse polarity protection		yes
Max. power-on delay time	[ms]	300
Measuring principle		capacitive
Outputs		
Electrical design		PNP
Output function		complementary
Max. voltage drop switching output DC	[V]	2.5
Max. leakage current	[mA]	0.1
Permanent current rating of switching output DC	[mA]	200
Short-time current rating of switching output	[mA]	200
Switching frequency DC	[Hz]	10

KI533A

Capacitive sensor

KIE4150NCPKG/US/IO/3D

Type of short-circuit protection		pulsed
Short-circuit proof		yes
Overload protection		yes
Detection zone		
Sensing range	[mm]	3...26
Sensing range adjustable		yes
Real sensing range Sr	[mm]	15 ± 10 %
Accuracy / deviations		
Hysteresis	[% of Sr]	1...15
Switch point drift	[% of Sr]	-20...20
Interfaces		
Communication interface		IO-Link
Transmission type		COM2 (38,4 kBaud)
IO-Link revision		1.1
SDCI standard		IEC 61131-9
Profiles		Smart Sensor: Process Data Variable; Device Identification
SIO mode		yes
Required master port type		A
Min. process cycle time	[ms]	20
IO-Link functions (acyclical)		application specific tag; operating hours counter; PNP / NPN (parametrierbar); switch point setting; Hysteresis
Operating conditions		
Ambient temperature	[°C]	-20...60
Protection		IP 65; IP 67
Tests / approvals		
ATEX marking		II 3D Ex tc IIIC T90°C Dc X
EMC		EN 61000-4-2 ESD: kV / 8 kV AD
		EN 61000-4-3 HF radiated: 3 V/m (80...2000 MHz)
		EN 61000-4-4 Burst: 2 kV
		EN 61000-4-6 HF conducted: 3 V 0,15...80 MHz
		EN 55011: class B
		IEC 60255-5: 1 kV line to line, Ri: 500 Ohm
Vibration resistance		EN 60068-2-6 Fc: 10...55 Hz 1 mm amplitude, oscillation period 5 min., 30 min. per axis at resonance or 55 Hz
Shock resistance		EN 60068-2-27 Ea: 30 g 6 shocks / 11 ms half-sine (x, y, z)
MTTF	[years]	623
Mechanical data		
Weight	[g]	154.2
Housing		threaded type
Mounting		non-flush mountable
Dimensions	[mm]	M30 x 1.5 / L = 150
Thread designation		M30 x 1.5
Materials		housing: PA; potentiometer: LCP; PBT

KI533A

Capacitive sensor

KIE4150NCPKG/US/IO/3D

Displays / operating elements		
Display	switching status	1 x LED, yellow
Accessories		
Items supplied	lock nuts: 2	
Remarks		
Pack quantity	1 pcs.	
Electrical connection		
Connection		

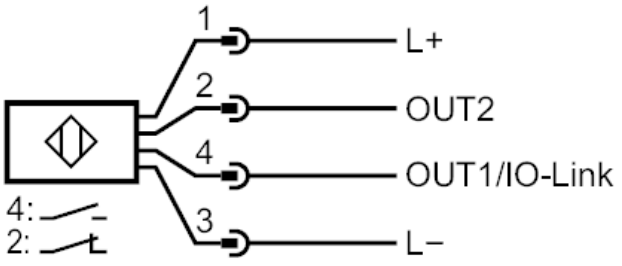

Connector: 1 x M12; Moulded body: aluminium