Current Transducer AHR B420

I_{PN} = 500 ... 2000 A

Ref: AHR 500 B420; AHR 800 B420; AHR 1000 B420; AHR 1500 B420; AHR 2000 B420

For the electronic measurement of currents: DC, AC, pulsed...,with galvanic separation between the primary circuit and the secondary circuit.

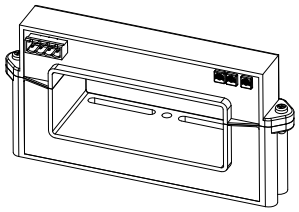

Electrical data

Primary nominal DC & AC current I_{PN} (A)	Primary AC current, max. peak value [1] I_{PM} (A)	Output voltage I_{out} (mA DC)	Type
500	2000	4-20	AHR 500 B420
800	2500	4-20	AHR 800 B420
1000	2000	4-20	AHR 1000 B420
1500	2500	4-20	AHR 1500 B420
2000	3000	4-20	AHR 2000 B420

R_L	Load resistance	< 300	Ω
U_C	Supply voltage (±5 %) [1]	+20 ... 50	V DC
I_C	Current consumption	30 mA + I_{out}	
I_{SL}	Output current limitation	< 25	mA
$\hat{I}_{P\,max}$	Primary withstand peak current (maximum)	30000	A

Accuracy - Dynamic performance data [2]

ε	Error @ I_{PN}, T_A = 25 °C (excluding offset)	< ±1	% of I_{PN}
ε_L	Linearity error (1 % of I_{PN} ... ±I_{PN})	< ±1.0	% of I_{PN}
I_{OE}	Electrical offset current @ T_A = 25 °C	4 ±0.2	mA
TCI_{OE}	Temperature coefficient of I_{OE} 0 °C ... +60 °C	±3.2	µA/K
	−40 °C ... +70 °C	±6.4	µA/K
TCI_{out}	Temperature coefficient of I_{out} (% of reading)	±0.15	%/K
$t_{D\,90}$	Delay time to 90 % of the final output value for I_{PN} step	< 150	ms
BW	Frequency bandwidth (±1 dB)	DC 20 ... 6000	Hz

General data

T_A	Ambient operating temperature	−40 ... +70	°C
$T_{A\,st}$	Ambient storage temperature	−40 ... +85	°C
m	Mass	650	g
IPxx	Protection degree	IP20	
	Standard	EN 50178: 1997 [3]	

Notes:
[1] The max peak AC current is the highest peak level of primary signal that is taken into account for accurate true RMS calculation. Yet the device is designed for maximum continuous true RMS value equal to I_{PN}, whereas the output is limited by the above specified output limitation.
[2] WARNING: The specified characteristics of the transducer are only guaranteed if the paired top and bottom parts are mounted together and not mixed with similar parts of other transducers.
[3] Regarding compliance towards IEC 61000-4-6 (EN 61000-6-2 (2005)): Variation of the offset between 150 kHz and 80 kHz with 10 V AM 80 % @ 1 kHz.

Features

- DC + distorted AC waveform currents measurement
- True RMS output
- Busbar or panel mounting
- Split core type
- Insulating plastic case recognized according to UL 94-V0.

Advantages

- High insulation between primary and secondary circuits
- Eliminates insertion loss
- Easy installation.

Applications

- AC power supplies or Motors: True RMS current sensing - the most accurate way to monitor power supply or motor input power
- VFD Controlled Loads: VFD output current monitoring to indicate how the motor and attached load are operating.
- SCRs or Swith-mode Rectifiers: Accurate measurement of output current
- Renewable Energy Installations or Backup Batteries: Continuous condition minitoring allowing automatic failure detection/ anticipation.

Application domain

- Energy solutions.

18October2022/Version 14

LEM reserves the right to carry out modifications on its transducers, in order to improve them.

LEM International SA
Route du Nant-d'Avril, 152
1217 Meyrin
www.lem.com

Current Transducer AHR B420

Insulation coordination

U_d	RMS voltage for AC insulation test [1], 50 Hz, 1min	5.8	kV
d_{Cp}	Creepage distance	11.9	mm
d_{Cl}	Clearance	11.9	mm
CTI	Comparative tracking index (group IIIa)	225	

Note: [1] Between primary (completely filling the aperture) and secondary.

Applications examples

According to **EN 50178 and IEC 61010-1 standards** and following conditions:

- Over voltage category OV 3
- Pollution degree PD2
- Non-uniform field

	EN 50178	IEC 61010-1
d_{Cp}, d_{Cl}, U_{Ni}	Rated insulation voltage	Nominal voltage
Basic insulation	1000 V	1000 V
Reinforced insulation	500 V	500 V

Safety

This transducer must be used in limited-energy secondary circuits according to IEC 61010-1.



This transducer must be used in electric/electronic equipment with respect to applicable standards and safety requirements in accordance with the manufacturer's operating instructions.



Caution, risk of electrical shock.

When operating the transducer, certain parts of the module can carry hazardous voltage (eg. primary busbar, power supply).
Ignoring this warning can lead to injury and/or cause serious damage.
This transducer is a build-in device, whose conducting parts must be inaccessible after installation.
A protective housing or additional shield could be used.
Main supply must be able to be disconnected.

LEM reserves the right to carry out modifications on its transducers, in order to improve them.

LEM International SA
Route du Nant-d'Avril, 152
1217 Meyrin
www.lem.com

Dimensions AHR B420 (in mm)

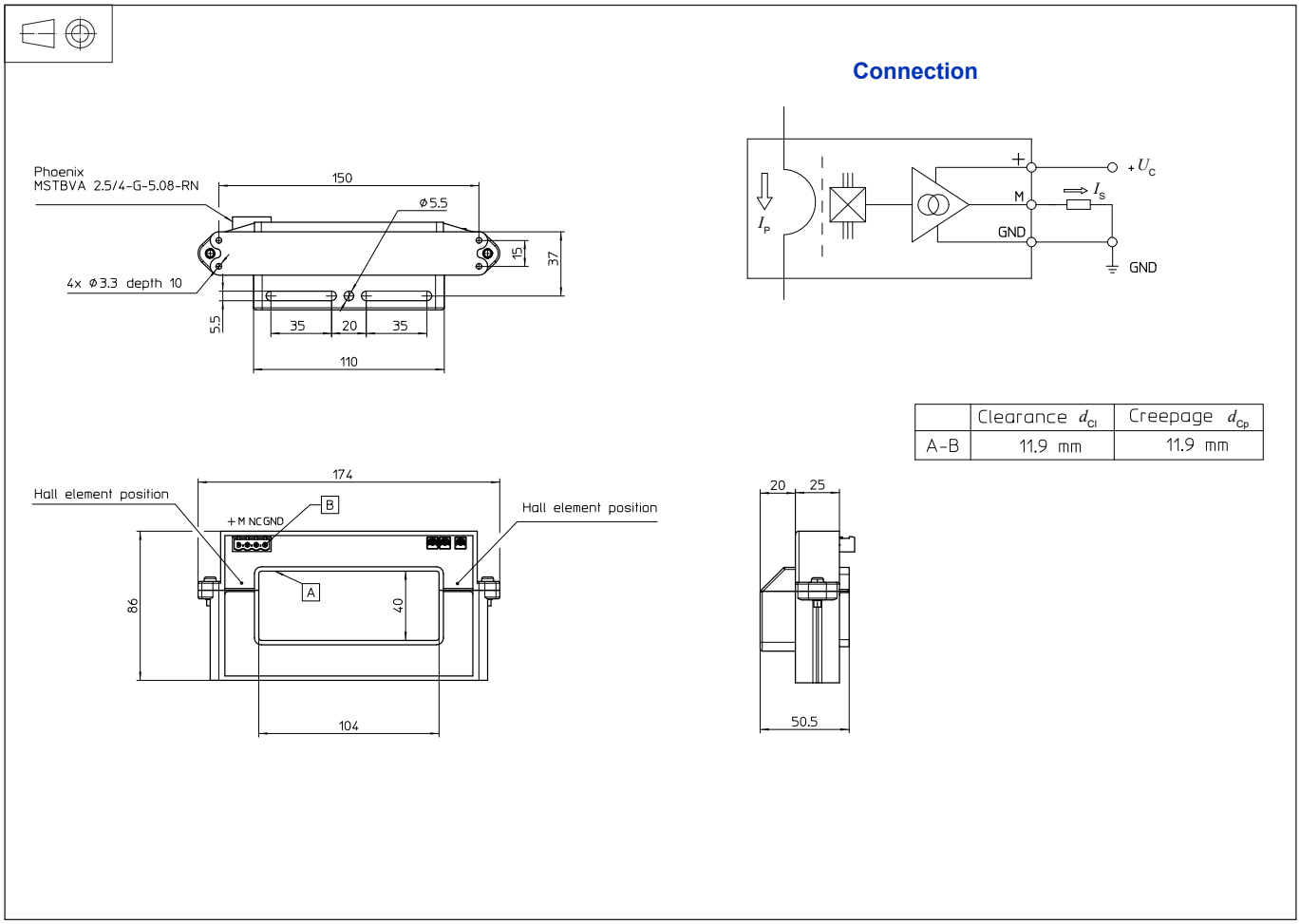

Connection

	Clearance d_{Cl}	Creepage d_{Cp}
A–B	11.9 mm	11.9 mm

Mechanical characteristics

- General tolerance ±1.0 mm
- Primary aperture 104 × 40 mm
- Mounting

  Busbar fastening 1 hole ⌀ 5.5 mm &
  2 slots 5.5 × 35 mm

  Panel mounting 4 holes ⌀ 3.3 mm

  Distance between hole axes 15 × 150 mm

  For panel mounting, use M4 screws (not supplied) with appropriate length to panel's thickness, and tighten to 0.8 N·m ±20 % torque.

Remarks

- The return busbar and primary conductor elbow must be located at a minimum distance of 2.5 × the window length away from the transducer case.
- Temperature of the primary conductor can not exceed 90 °C.
- Installation of the transducer must be done unless otherwise specified on the datasheet, according to LEM Transducer Generic Mounting Rules. Please refer to LEM document N°ANE120504 available on our Web site:

  https://www.lem.com/en/file/3137/download/.
- Dynamic performances (di/dt and delay time) are best with a single bar completely filling the primary hole.
- This is a standard model. For different versions (supply voltages, turns ratios, unidirectional measurements...), please contact us.

Transfer characteristics

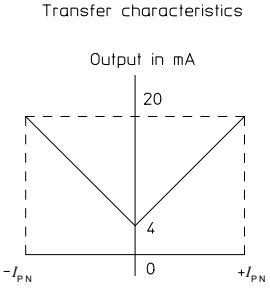

18October2022/Version 14

LEM reserves the right to carry out modifications on its transducers, in order to improve them.

LEM International SA
Route du Nant-d'Avril, 152
1217 Meyrin
www.lem.com