

Model Number

UBR400-F77-E2-V31

Reflex ultrasonic sensor

Features

- **Miniature design**
- **Program input**
- **Protection degree IP67**
- **Switching status indicator, yellow LED**

Diagrams

Characteristic response curve

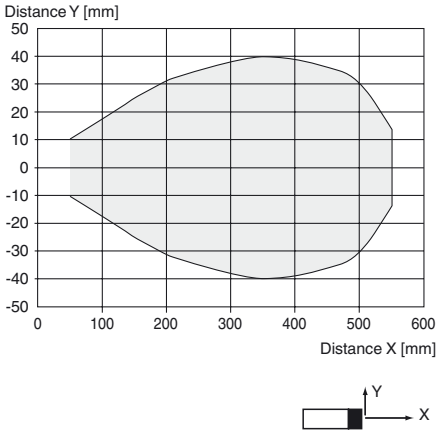

Technical data

General specifications	
Sensing range	0 ... 400 mm
Adjustment range	85 ... 400 mm
Standard target plate	20 mm x 20 mm
Transducer frequency	approx. 300 kHz
Nominal ratings	
Time delay before availability t_v	≤ 150 ms
Limit data	
Permissible cable length	max. 300 m
Indicators/operating means	
LED yellow	switching state and flashing: Teach-In
Electrical specifications	
Rated operational voltage U_e	24 V DC
Operating voltage U_B	20 ... 30 V DC , ripple 10 $\%_{SS}$; 12 ... 20 V DC reduced sensitivity by 90 %
No-load supply current I_0	≤ 20 mA
Input	
Input type	1 program input
Level	low level : 0 ... 0.7 V (Teach-IN active) high level : U_B or open input (Teach-IN inactive)
Input impedance	16 kΩ
Pulse length	≥ 3 s
Output	
Output type	1 switch output PNP, NO
Rated operational current I_e	200 mA , short-circuit/overload protected
Voltage drop U_d	≤ 2 V
Switch-on delay t_{on}	≤ 75 ms
Switching frequency f	5 Hz
Off-state current I_r	≤ 0.01 mA
Temperature influence	+ 0.17 %/K
Ambient conditions	
Ambient temperature	-25 ... 70 °C (-13 ... 158 °F)
Storage temperature	-40 ... 85 °C (-40 ... 185 °F)
Shock resistance	30 g , 11 ms period
Vibration resistance	10 ... 55 Hz , Amplitude ± 1 mm
Mechanical specifications	
Connection type	M8 x 1 connector , 4-pin
Protection degree	IP67
Material	
Housing	Polycarbonate
Transducer	epoxy resin/hollow glass sphere mixture; polyurethane foam
Installation position	any position
Mass	10 g
Tightening torque, fastening screws	max. 0.2 Nm
Compliance with standards and directives	
Standard conformity	
Standards	EN 60947-5-2:2007 IEC 60947-5-2:2007
Approvals and certificates	
UL approval	cULus Listed, General Purpose
CSA approval	cCSAus Listed, General Purpose

Release date: 2012-04-11 15:28 Date of issue: 2012-04-11 233246_eng.xml

Subject to reasonable modifications due to technical advances. Copyright Pepperl+Fuchs, Printed in Germany

Dimensions

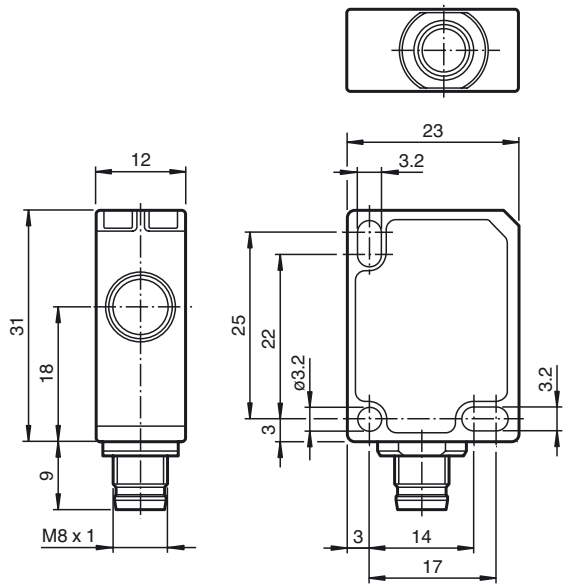

Electrical Connection

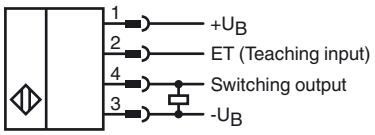

Pinout



Wire colors in accordance with EN 60947-5-2

1	BN	(brown)
2	WH	(white)
3	BU	(blue)
4	BK	(black)

Release date: 2012-04-11 15:28 Date of issue: 2012-04-11 233246_eng.xml

Subject to reasonable modifications due to technical advances. Copyright Pepperl+Fuchs, Printed in Germany
Pepperl+Fuchs Group • Tel.: Germany +49 621 776-0 • USA +1 330 4253555 • Singapore +65 67799091 • Internet http://www.pepperl-fuchs.com

Accessories

UB-PROG4-V31
Programming unit

OMH-ML7-01
Mounting bracket

V31-GM-2M-PVC
M8, 4-pin socket, PVC cable

V31-WM-2M-PVC
M8, 4-pin socket, PVC cable

Description of Sensor Function

The ultrasonic sensor works like a retroreflective sensor. It transmits ultrasonic packages in quick succession and responds to their reflection off a reference object at a defined distance. The distance T to the reference object can be taught in. The sensor has a switch output. This output switches if the reference object is not detected, which happens when another object is located between the sensor and the reference object. The limit of the switching range is derived as follows: T - 5 %.

Notes

- The distance T of the reference object must not be changed during operation. If the distance T changes, it will have to be taught-in again.
- The reference object must not be removed during operation.

Teach-In the Distance to the Reference Object

Proceed as follows to teach in the distance T to the reference object:

1. Connect the sensor and turn on the operating voltage.
2. Place the reference object at the required distance.
3. Connect the teach-in input (ET) to $-U_B$. This can be done using the pushbutton or the controller.
   The LED will start flashing after 3 seconds to indicate that the sensor is ready to start the teach-in process (*).
4. Disconnect the teach-in input (ET) with $-U_B$. The distance T to the reference object has now been taught in (*).

(*) If no object is detected within the sensing range of the sensor, the sensor will start flashing at a faster rate. The switching point remains unchanged.

Switching characteristics and display LED

Sensing range			Output	LED
	Adjustment range			
Switching area	5% of T	Reference object (position T)		
			$-U_B$	Off
●			$+U_B$	On
●			$+U_B$	On

● = Object position

Mounting instruction

If the sensor is operated at temperatures below 0 °C, use the supplied distance plate. Only use the two rearmost mounting holes (located opposite to the transducer) for mounting the sensor.

Safety Note



The use of this device in applications, where the safety of persons depends from the devices function, is not allowed!

Release date: 2012-04-11 15:28 Date of issue: 2012-04-11 233246_eng.xml

Subject to reasonable modifications due to technical advances. Copyright Pepperl+Fuchs, Printed in Germany